Accessories // Magnetic Tracks

Magnetic Track

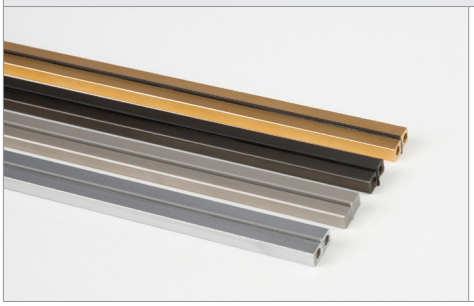

- low voltage magnetic track
- length 2 m, connectable
- in silver matt, champagne matt, black matt, gold matt available
- electrical connection on one or both sides
- connecting cable: standard length 3 m, pre-assembled with banana plug
- power input: 12V DC constant voltage

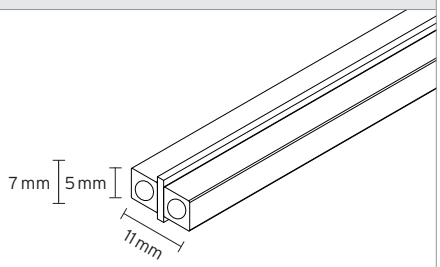

fastening part asymmetric

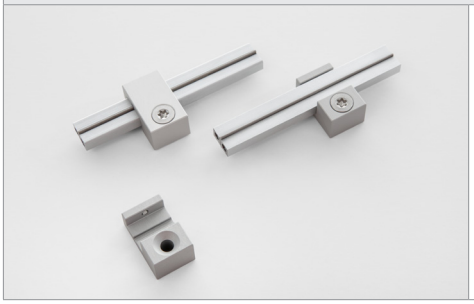

- magnetic track holder
- for mounting on wood or metal
- in aluminum anodized black, silver, champagne, gold
- mounting: screw on (M4), both sides mountable
- track secured with locking screw (M3x4)

- recommended number per meter: 3

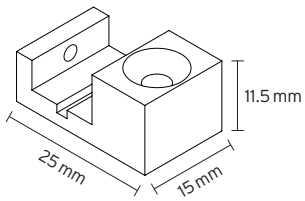

fastening part symmetric screw on

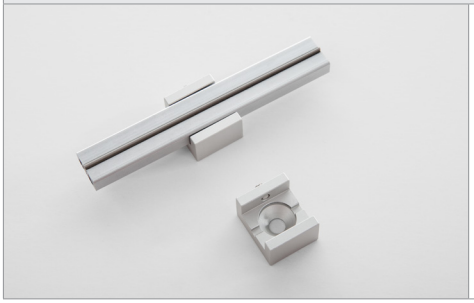

- magnetic track holder
- in aluminum anodized black, silver, champagne, gold
- mounting on wood: with a suitable countersunk screw
- mounting on metal: with countersunk screw M4 + suitable washer (plastic)
- track secured with locking screw (M3x4)
- recommended number per meter: 3

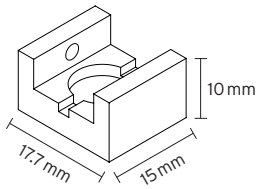

fastening part symmetric with internal thread

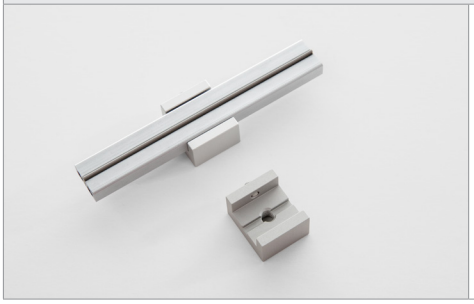

- magnetic track holder
- for mounting on wood or metal
- in aluminum anodized black, silver, champagne, gold
- mounting: screw on with internal thread (M4)
- track secured with locking screw (M3x4)

- recommended number per meter: 3

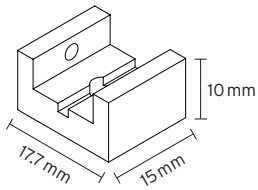

fastening part symmetric with internal thread incl. magnet

- magnetic track holder
- for mounting on magnetic surfaces
- in aluminum anodized black, silver, champagne, gold
- mounting: magnetic
- track secured with locking screw (M3x4)

- recommended number per meter: 3

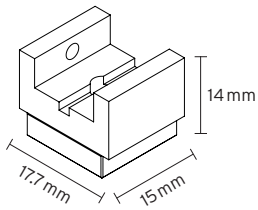

technical changes reserved | March 2023

Accessories // Magnetic Tracks

fastening part symmetric glue on

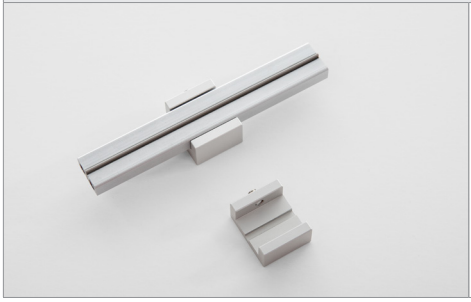

- magnetic track holder
- in aluminum anodized black, silver, champagne, gold
- mounting: glue on (special construction adhesive)
- track secured with locking screw (M3x4)

- recommended number per meter: 3

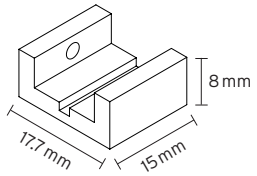

fastening part corner symmetric glue on

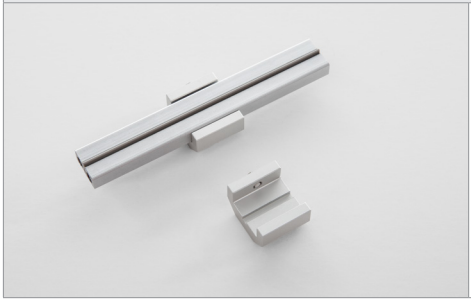

- magnetic track holder
- in aluminum anodized black, silver, champagne, gold
- mounting: glue on (special construction adhesive)
- track secured with locking screw (M3x4)

- recommended number per meter: 3

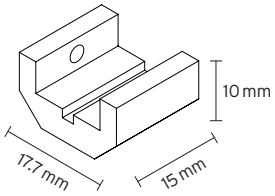

fastening part symmetric mini screw on

- magnetic track holder
- for mounting on wood or metal
- in aluminum anodized black, silver, champagne, gold
- mounting: screw on (M3)

- recommended number per meter: 4

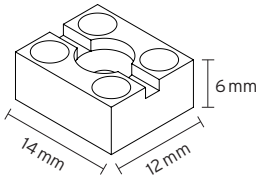

fastening part symmetric mini glue on

- magnetic track holder
- in aluminum anodized black, silver, champagne, gold
- mounting: glue on (special construction adhesive)

- recommended number per meter: 4

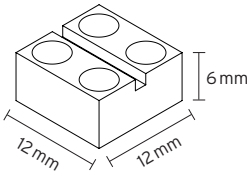

fastening part symmetric mini 90° screw on

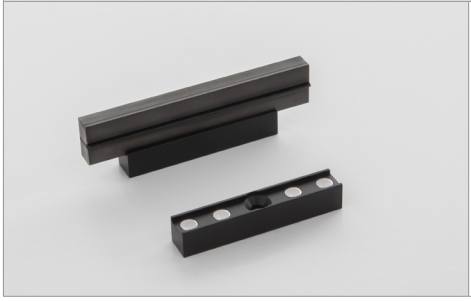

- magnetic track holder
- for mounting on wood or metal
- in aluminum anodized black, silver, champagne, gold
- mounting: screw on (M4)

- recommended number per meter: 4

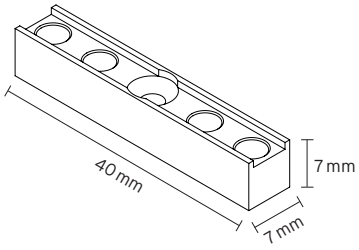

technical changes reserved | March 2023

Accessories // Magnetic Tracks

fastening part glass in a set with steel plate

- magnetic track holder
- for mounting on glass
- in aluminum anodized black, silver, champagne, gold
- mounting: magnetic
- track secured with locking screw (M3x4)
- steel plate glue on

- recommended number per meter: 2

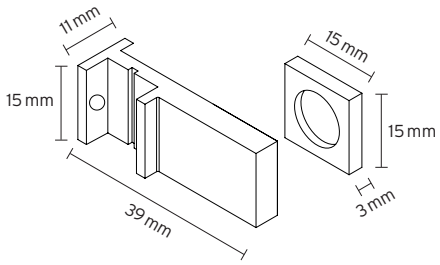

fastening part glass 45° in a set with steel plate

- magnetic track holder
- for mounting on glass
- in aluminum anodized black, silver, champagne, gold
- mounting: magnetic
- track secured with locking screw (M3x4)
- steel plate glue on

- recommended number per meter: 2

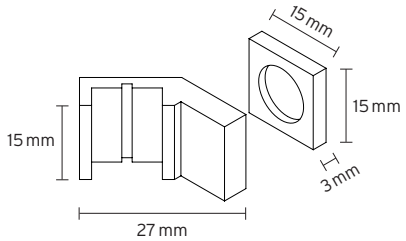

glass shelf holder

- glass shelf holder for magnetic track
- in aluminum anodized black, silver, champagne, gold
- fastened to the track with 2 screws (M3)

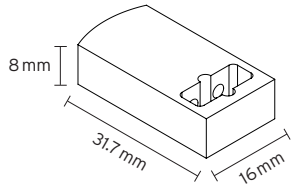

adapter for showcase installation

- adapter incl. support tube (Ø 10 mm) for magnetic track for showcase installation
- for length over 1.20 m central support needed
- in aluminum anodized black, silver, champagne, gold
- magnetic and screw on fastening

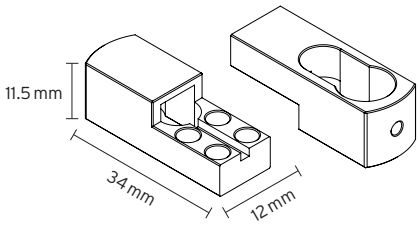

central support for showcase installation

- holder incl. support tube (Ø 10 mm) magnetic track for showcase installation
- from a length of 1.20 m for a sagging to prevent the magnetic track
- in aluminum anodized black, silver, champagne, gold
- magnetic and screw on fastening

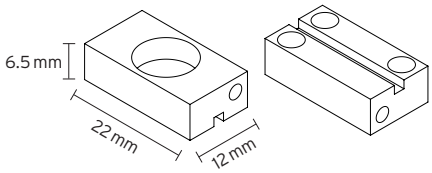

technical changes reserved | March 2023

Accessories // Magnetic Tracks

puck

- magnetic track holder for free vertical mounting
- in aluminum anodized black, silver, champagne, gold
- in POM, black
- mounting: magnetic or glue on (special construction adhesive)

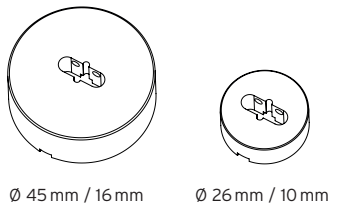

Y-connector

- three-axis orthogonal connector for magnetic tracks (dimensions valid without plug)
- 2 variants (mirrored)
- in aluminum anodized black, silver, champagne, gold
- mounting: banana plugs

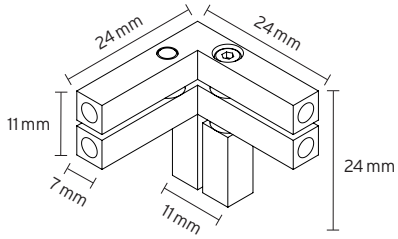

corner connector horizontal

- corner connector horizontal (dimensions valid without plug)
- in aluminum anodized black, silver, champagne, gold
- mounting: banana plugs

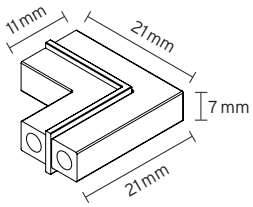

corner connector vertical

- corner connector vertical (dimensions valid without plug)
- in aluminum anodized black, silver, champagne, gold
- mounting: banana plugs

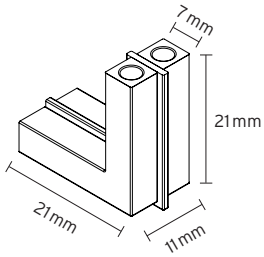

corner connector flexible

- corner connector for magnetic tracks
- double-sided plug contact with double-core cable, soldered
- cable cross-section 2 x 0.5 mm²
- standard length 27 mm and 37 mm (length adjustable on request)

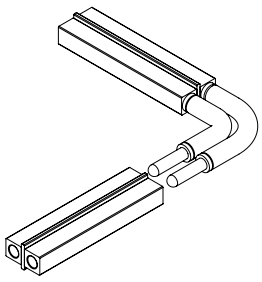

technical changes reserved | March 2023

Accessories // Magnetic Tracks

connector straight

- connector for magnetic tracks/ double banana plugs
- double-sided banana plug contact, recessed in the magnetic track

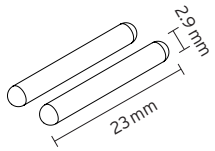

Table attachment for showcase installation

- table attachment for 10 mm support tube
- in aluminum anodized black, silver
- mounting: screw on
- borehole diameter: 14.5 mm
- installation depth: 20 - 40 mm

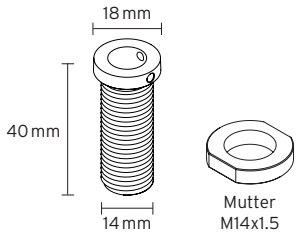

technical changes reserved | March 2023

LED spotlight C1-DL

part number: A400015

description:
LED spotlight for installation in display case ceilings,
360° rotatable, 55° swivelling

housing colour:
aluminum anodised matte in black, silver, gold, champagne
(other surface finishing on request)

optics:
10°, 15°, 20°, 35°, 45°, 80°, 46°+ 10°

light colour (+/- 100K):
~2,700 K, ~3,000 K, ~3,500 K, ~4,000 K, ~5,700 K

high power LED, high CRI DIN EN 55015:2013,
lifetime 50,000 hours | basis of lifetime L80B10

protection class: IP 20, protection class III, CE,
UL Listed No. E506729 - low voltage LED luminaire

luminous flux (~3,000 K | 20° | 500 mA):
~180 lm at ~2.9 W (62 lm/W)

power input:
500 mA (constant current)

allowed LED driver:
LED driver for the Micro Jolly, Mini Jolly,
Maxi Jolly by TCI with constant current
(other LED driver on request)

dimming: external
via potentiometer (incl.)

optional accessories:
honeycomb grid, anti-glare tube, inclined tube,
light diffusion foil, barn doors,
zoom optic (2° - 25°, 6° - 36°)

dimensions

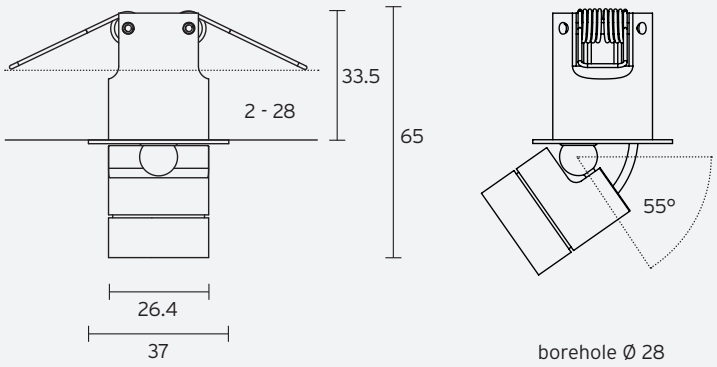

specification in mm

photometry

for light colour ~3,000 K | standard lens 20° | 500 mA | CRI typ. 97, R9 > 90, R12 > 90 | colour variation ≤ 3 SDCM

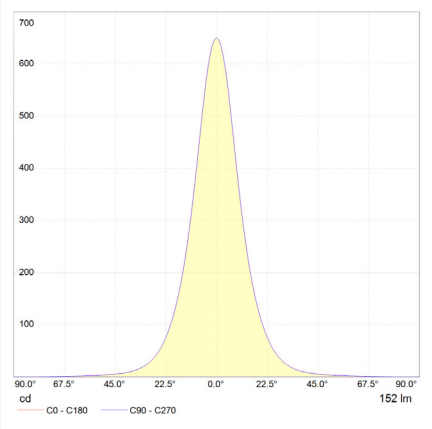

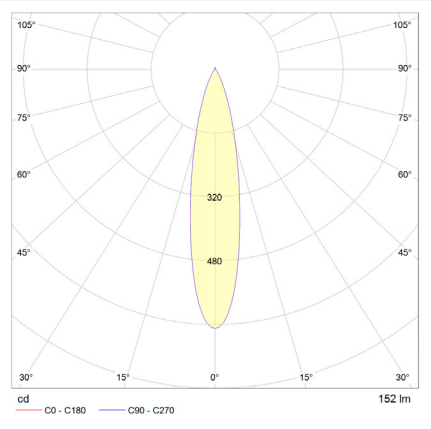

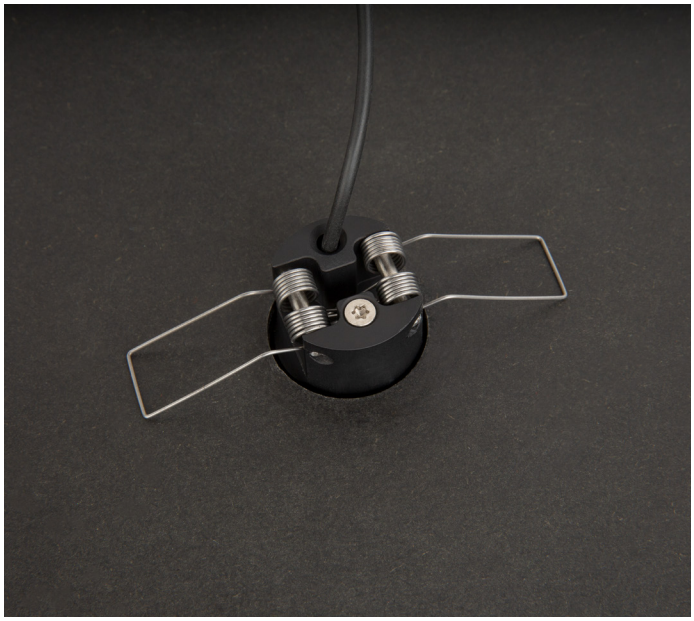

technical changes reserved | July 2023

LED spotlight C1-micro-LC

part number: A400001

description:
LED spotlight for installation on magnetic track,
360° rotatable, 90° swivelling

housing colour:
aluminum anodised matte in black, silver, gold, champagne
(other surface finishing on request)

optics:
15°, 18°, 26°, 30°, 45°, 80°, 47°+25°, 40°+10°

light colour (+/- 100K):
~2,700 K, ~3,000 K, ~3,500 K, ~4,000 K, ~5,700 K

high power LED, high CRI DIN EN 55015:2013,
lifetime 50,000 hours | basis of lifetime L80B10

protection class: IP 20, protection class III, CE,
UL Listed No. E506729 - low voltage LED luminaire

luminous flux (~3,000 K | 30°):
~50 lm at ~1 W (50 lm/W)

power input: 9 - 12V DC (constant voltage)

allowed LED driver:
- power supply of PWM series by MeanWell
  with constant voltage 9 - 12V DC, class 2
- power supply for the LPF, NPF or APV series
  by MeanWell with constant voltage 12V DC, class 2
  in combination with dimmer by feno
  (other power supplies on request)

dimming: external via potentiometer (incl.)

accessory: magnetic track

optional accessories:
magnetic track holders, honeycomb grid, anti-glare tube,
inclined tube, light diffusion foil, barn doors

dimensions

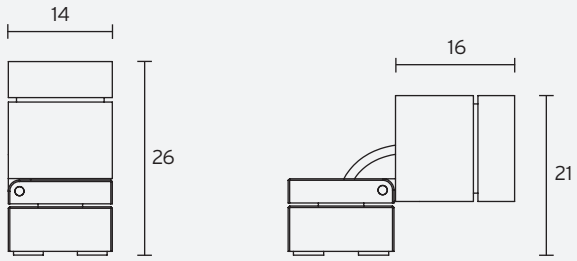

specification in mm

photometry

for light colour ~3,000 K | standard lens 30° | CRI typ. 97, R9 > 90, R12 > 90 | colour variation ≤ 3 SDCM

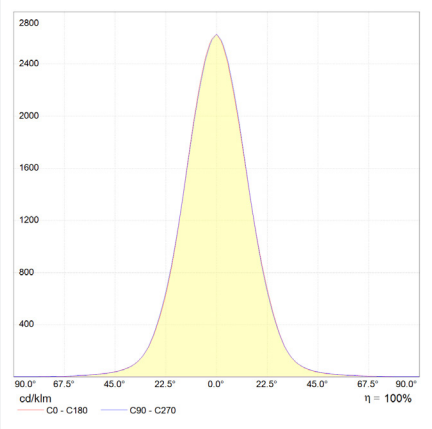

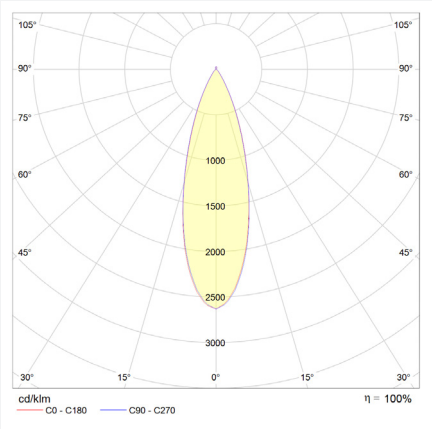

technical changes reserved | July 2023

LED spotlight C1-mini-C Casambi Control

part number: A400030

description:
LED spotlight for installation on magnetic track,
180° rotatable, 90° swivelling

housing colour:
aluminum anodised matte in black, silver, gold, champagne
(other surface finishing on request)

optics:
8°, 15°, 18°, 26°, 30°, 45°, 80°, 47°+25°, 40°+10°

light colour (+/- 100K):
~2,700 K, ~3,000 K, ~3,500 K, ~4,000 K, ~5,700 K

high power LED, high CRI DIN EN 55015:2013,
lifetime 50,000 hours | basis of lifetime L80B10

protection class: IP 20, protection class III, CE,
ETSI EN 300 328 V2.2.2,
UL Listed No. E506729 - low voltage LED luminaire

luminous flux (~3,000 K | 30°):
~145 lm at ~2.5 W (58 lm/W)

power input: 9 - 24V DC

allowed LED driver:
power supply of LPF, NPF or APV series
by MeanWell with constant voltage 12V DC, class 2
(other power supplies on request)

dimming: via Casambi-App

accessory: magnetic track

optional accessories:
magnetic track holders,
honeycomb grid, anti-glare tube, inclined tube,
snoot (8°), light diffusion foil, barn doors,
zoom optic (9° - 33°)

dimensions

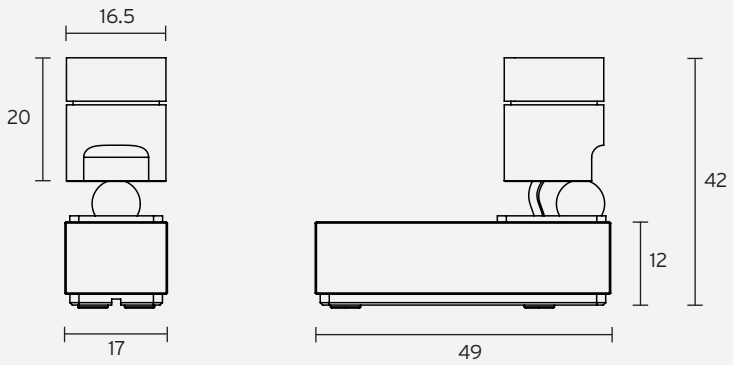

specification in mm

photometry

for light colour ~3,000 K | standard lens 30° | CRI typ. 97, R9 > 90, R12 > 90 | colour variation ≤ 3 SDCM

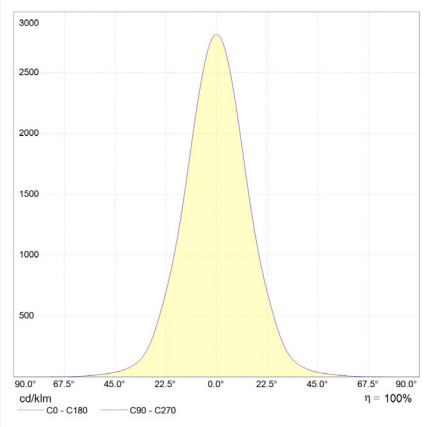

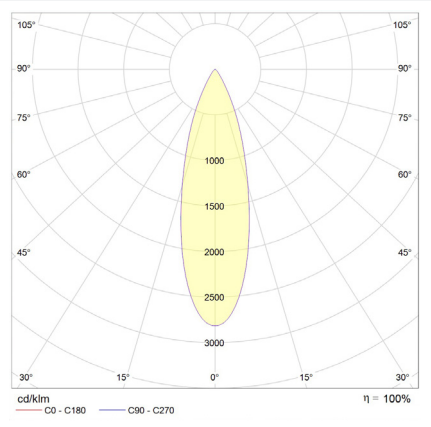

Dimming

The C1-mini-C spotlight is controlled via the Casambi app. The set value is automatically saved and retained even after a power cut. The dimming range has 810 steps (flicker-free) from 100% to 0.4%. The dimming frequency is 19.75 kHz.

The Casambi app can be freely downloaded from the App Store or Google Play. After opening, the app automatically finds all Casambi-operated spotlights.
Tap on Add *All luminaires to ... / My network*. All spotlights are connected into a network and the *Luminaires* menu opens automatically. (To switch on or off - tap the symbol; to dim - swipe horizontally over the symbol)

technical changes reserved | July 2023

LED spotlight C1-mini-DL

part number: A400003

description:
LED spotlight for installation in display case ceilings, 360° rotatable, 55° swivelling

housing colour:
aluminum anodised matte in black, silver, gold, champagne (other surface finishing on request)

optics:
8°, 15°, 18°, 26°, 30°, 45°, 80°, 47°+25°, 40°+10°

light colour (+/- 100K):
~2,700 K, ~3,000 K, ~3,500 K, ~4,000 K, ~5,700 K

high power LED, high CRI DIN EN 55015:2013, lifetime 50,000 hours | basis of lifetime L80B10

protection class: IP 20, protection class III, CE, UL Listed No. E506729 - low voltage LED luminaire

luminous flux (~3,000 K | 30° | 500 mA):
~150 lm at ~2.7 W (57 lm/W)

power input:
500 mA (constant current)

allowed LED driver:
LED driver for the Micro Jolly, Mini Jolly, Maxi Jolly by TCI with constant current (other LED driver on request)

dimming:
external via potentiometer (incl.)

optional accessories:
honeycomb grid, anti-glare tube, inclined tube, snoot (8°), light diffusion foil, barn doors, zoom optic (9° - 33°)

dimensions

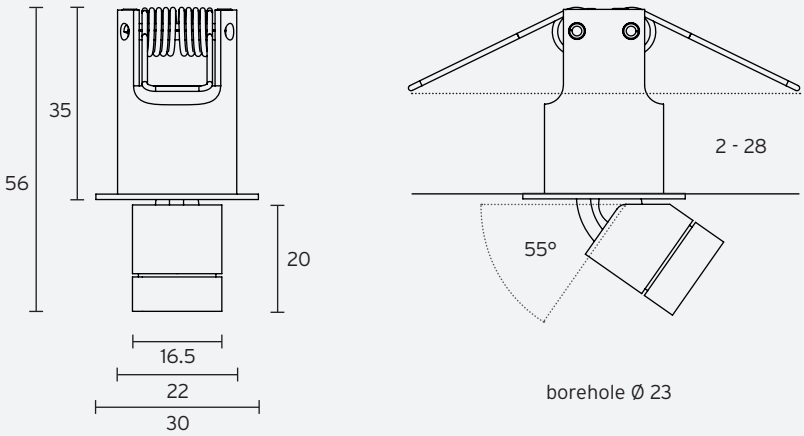

specification in mm

photometry

for light colour ~3,000 K | standard lens 30° | 500 mA | CRI typ. 97, R9 > 90, R12 > 90 | colour variation ≤ 3 SDCM

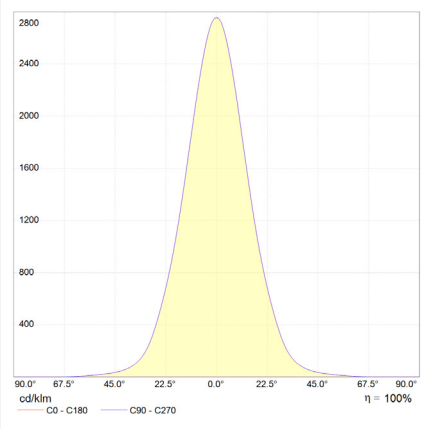

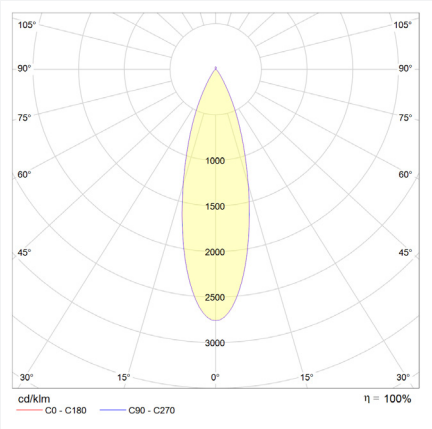

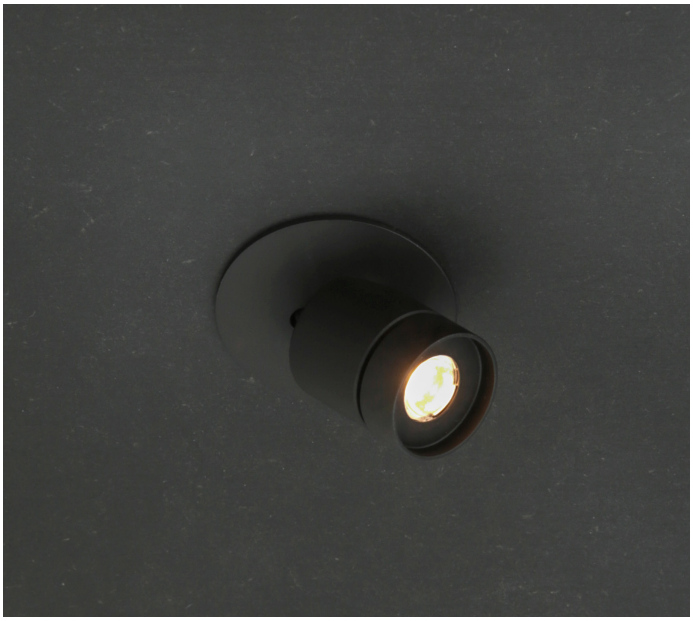

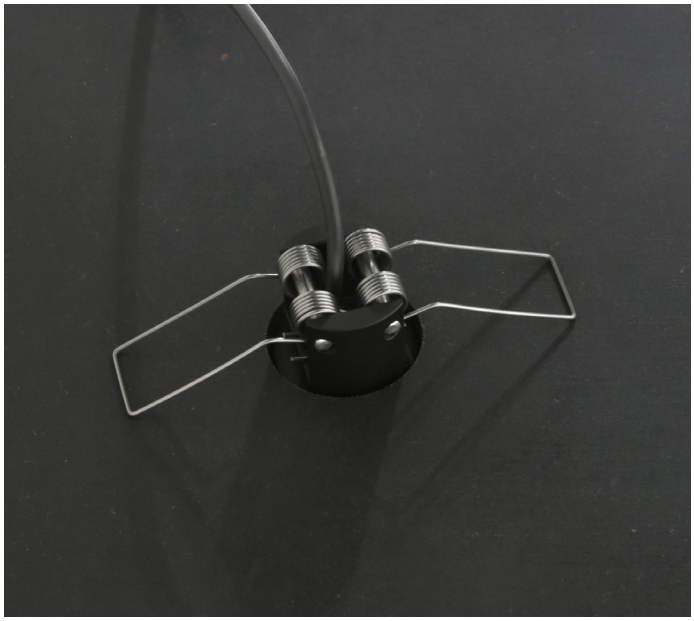

technical changes reserved | July 2023

LED spotlight C1-mini-E

part number: A400004

description:
LED spotlight for installation in display cases,
360° rotatable, 125° swivelling,
with screw base or magnetic base

housing colour:
aluminum anodised matte in black, silver, gold, champagne
(other surface finishing on request)

lenses:
8°, 15°, 18°, 26°, 30°, 45°, 80°, 47°+25°, 40°+10°

light colour (+/- 100K):
~2,700 K, ~3,000 K, ~3,500 K, ~4,000 K, ~5,700 K

high power LED, high CRI DIN EN 55015:2013,
lifetime 50,000 hours | basis of lifetime L80B10

protection class: IP 20, protection class III, CE,
UL Listed No. E506729 - low voltage LED luminaire

luminous flux (~3,000 K | 30° | 500 mA):
~140 lm at ~2.2 W (63 lm/W)

power input:
500 mA (constant current)

allowed LED driver:
LED driver for the Micro Jolly, Mini Jolly,
Maxi Jolly by TCI with constant current
(other LED driver on request)

dimming:
external via potentiometer (incl.)

optional accessories:
honeycomb grid, anti-glare tube, inclined tube,
snoot (8°), light diffusion foil, barn doors

dimensions

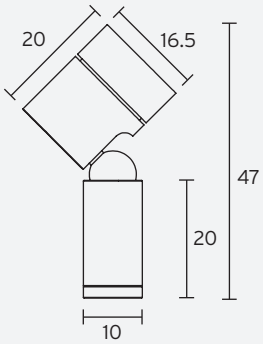

magnetic base

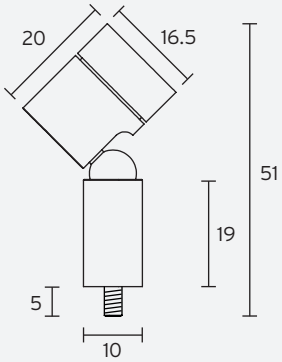

screw base (thread M3)

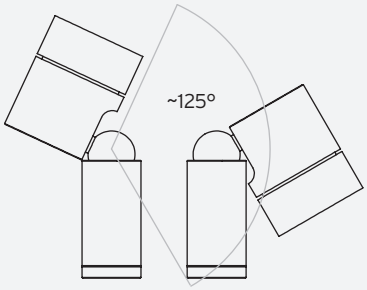

specification in mm

photometry

for light colour ~3,000 K | standard lens 30° | 500 mA | CRI typ. 97, R9 > 90, R12 > 90 | colour variation ≤ 3 SDCM

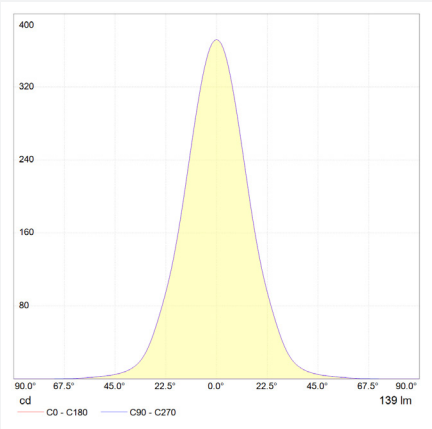

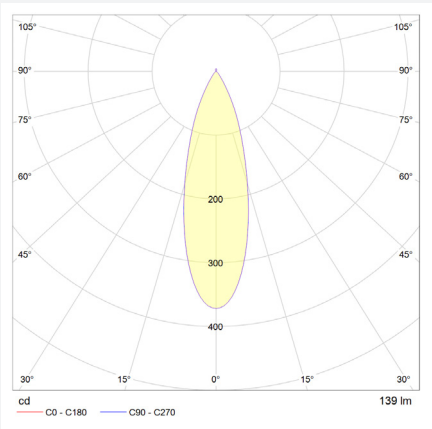

technical changes reserved | July 2023

C1-mini-E-VL // Technical Data

description:	LED spotlight for installation in display cases, 360° rotatable, 125° swivelling, attachment with mounting flange
part number:	A400005
housing colour:	aluminum anodised matte in black, silver, gold, champagne (other surface finishing on request)
optics:	8°, 15°, 18°, 26°, 30°, 45°, 80°, 47°+ 25°, 40°+ 10°
light colour (+/- 100 K):	~2,700 K, ~3,000 K, ~3,500 K, ~4,000 K, ~5,700 K
high power LED, high CRI:	DIN EN 55015:2013, lifetime 50,000 hours | basis of lifetime L80B10
luminous flux (~3,000 K | 30° | 500 mA):	~140 lm at ~2.2 W (63 lm/W)
power input:	500 mA (constant current)
allowed LED driver:	LED driver for the Micro Jolly, Mini Jolly, Maxi Jolly by TCI with constant current other LED driver on request)
dimming:	external via potentiometer (incl.)
protection class:	IP 20, protection class III, CE UL Listed No. E506729 - low voltage LED luminaire
optional accessories:	honeycomb grid, anti-glare tube, inclined tube, snoot (8°), light diffusion foil, barn doors

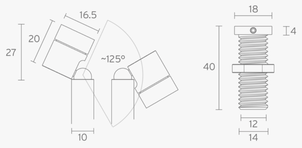

- standard tube length 440 mm
  (visible length 400 mm)
- minimum tube length 65 mm
  (visible length 25 mm)
- the length of the tube can be varied
  using the grub screw on the flange
- possible panel thicknesses 2 - 23 mm
- borehole Ø 15 mm

Data PDF | Enquiry IES | Enquiry LDT | Enquiry Price

C1-mini-HC // Technical Data

description:	LED spotlight for installation on magnetic track 180° rotatable, 90° swivelling
part number:	A400006
housing colour:	aluminum anodised matte in black, silver, gold, champagne (other surface finishing on request)
optics:	8°, 15°, 18°, 26°, 30°, 45°, 80°, 47°+ 25°, 40°+ 10°
light colour (+/- 100 K):	~2,700 K, ~3,000 K, ~3,500 K, ~4,000 K, ~5,700 K
high power LED, high CRI:	DIN EN 55015:2013, lifetime 50,000 hours | basis of lifetime L80B10
protection class:	IP 20, protection class III, CE, UL Listed No. E506729 - low voltage LED luminaire
luminous flux (~3,000 K | 30°):	~60 lm at ~1.0 W (60 lm/W) ~110 lm at ~2.0 W (55 lm/W)
power input:	12V DC (constant voltage)
allowed LED driver:	power supply for LPF, NPF or APV series by MeanWell with constant voltage 12V DC, class 2 (other power supplies on request)
dimming:	on board with dimming pen (incl.)
accessory:	magnetic track
optional accessories:	magnetic track holders, honeycomb grid, anti-glare tube, inclined tube, snoot (8°), light diffusion foil, barn doors, zoom optic (9° - 33°)

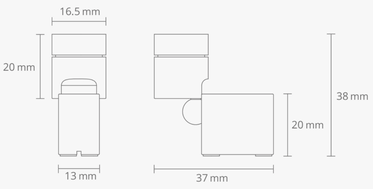

Data PDF | Enquiry IES | Enquiry LDT | Enquiry Price

LED spotlight C1-mini-HC-VL

part number: A400007

description:
LED spotlight for installation on magnetic track,
360° rotatable, 125° swivelling

housing colour:
aluminum anodised matte in black, silver, gold, champagne
(other surface finishing on request)

optics:
8°, 15°, 18°, 26°, 30°, 45°, 80°, 47°+25°, 40°+10°

light colour (+/- 100K):
~2,700 K, ~3,000 K, ~3,500 K, ~4,000 K, ~5,700 K

high power LED, high CRI DIN EN 55015:2013,
lifetime 50,000 hours | basis of lifetime L80B10

protection class: IP 20, protection class III, CE,
UL Listed No. E506729 - low voltage LED luminaire

luminous flux (~3,000 K | 30°):
~60 lm at ~1.0 W (60 lm/W)
~110 lm at ~2.0 W (55 lm/W)

power input: 12V DC (constant voltage)

allowed LED driver:
power supply of LPF, NPF or APV series by MeanWell
with constant voltage 12V DC, class 2
(other power supplies on request)

dimming: on board with dimming pen (incl.)

accessory: magnetic track T

optional accessories:
magnetic track holders,
honeycomb grid, anti-glare tube, inclined tube,
snoot (8°), light diffusion foil, barn doors,
zoom optic (9° - 33°)

dimensions

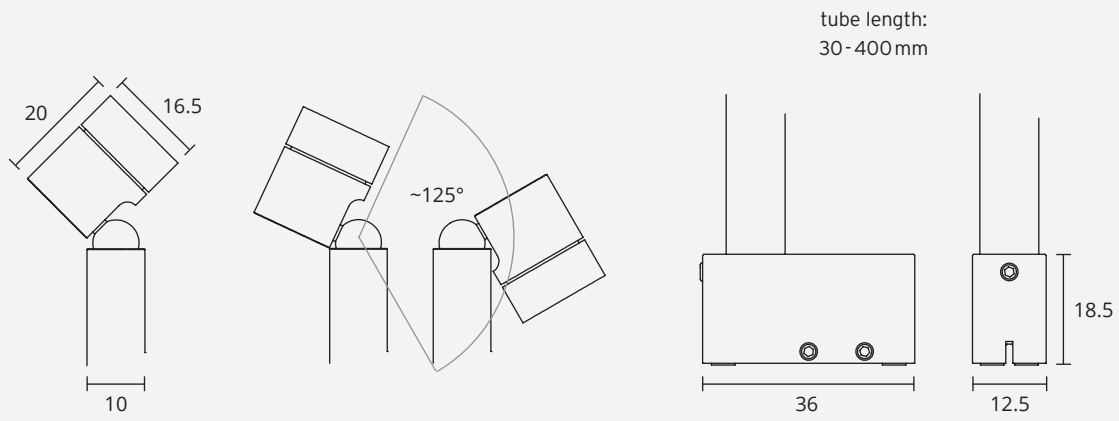

specification in mm

photometry

for light colour ~3,000 K | standard lens 30° | CRI typ. 97, R9 > 90, R12 > 90 | colour variation ≤ 3 SDCM

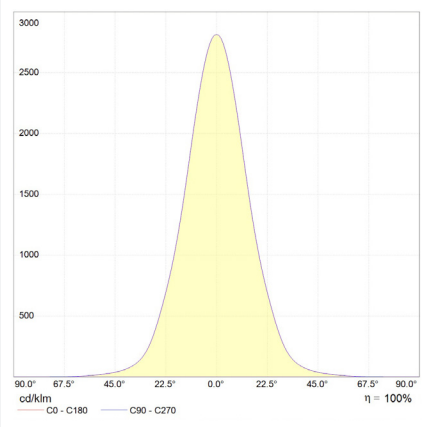

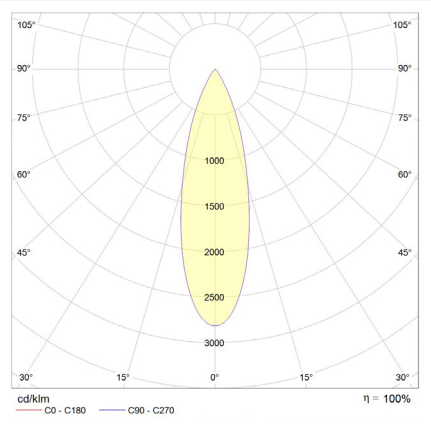

Sensor area

The sensor is located above the middle one screw on the lamp base.

Dimming

Place the dimming pen in the sensor area. The dimming process stops by removing the pen. When the dimming pen is attached again, the dimming direction is changed. Your set dimming is automatically saved after approx. 5 - 10 seconds.
The dimming range is flicker-free adjustable from 100% to 10% in 256 steps. (dimming frequency approx. 14 kHz)
The spotlight is set to 100% at initial start-up.

technical changes reserved | July 2023

LED spotlight C1-mini-HLC

part number: A400008

description:
LED spotlight for installation on magnetic track,
360° rotatable, 90° swivelling

housing colour:
aluminum anodised matte in black, silver, gold, champagne
(other surface finishing on request)

optics:
8°, 15°, 18°, 26°, 30°, 45°, 80°, 47°+25°, 40°+10°

light colour (+/- 100K):
~2,700 K, ~3,000 K, ~3,500 K, ~4,000 K, ~5,700 K

high power LED, high CRI DIN EN 55015:2013,
lifetime 50,000 hours | basis of lifetime L80B10

protection class: IP 20, protection class III, CE,
UL Listed No. E506729 - low voltage LED luminaire

luminous flux (~3,000 K | 30°):
~60 lm at ~1.0 W (60 lm/W)
~110 lm at ~2.0 W (55 lm/W)

power input: 12V DC (constant voltage)

allowed LED driver:
power supply of LPF, NPF or APV series by MeanWell
with constant voltage 12V DC, class 2
(other power supplies on request)

dimming: on board with dimming pen (incl.)

accessory: magnetic track

optional accessories:
magnetic track holders,
honeycomb grid, anti-glare tube, inclined tube,
snoot (8°), light diffusion foil, barn doors,
zoom optic (9° - 33°)

dimensions

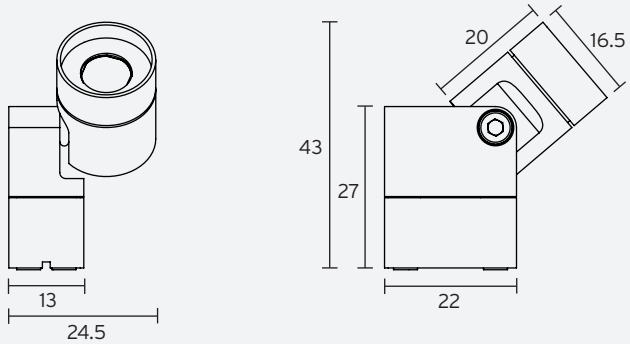

specification in mm

photometry

for light colour ~3,000 K | standard lens 30° | CRI typ. 97, R9 > 90, R12 > 90 | colour variation ≤ 3 SDCM

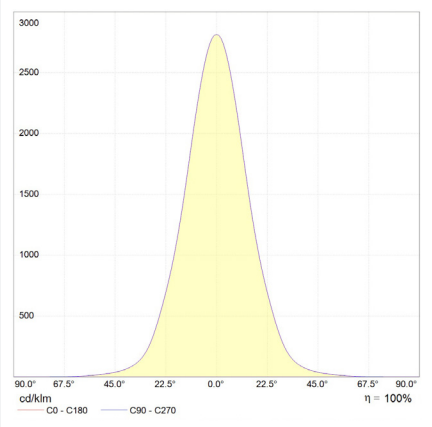

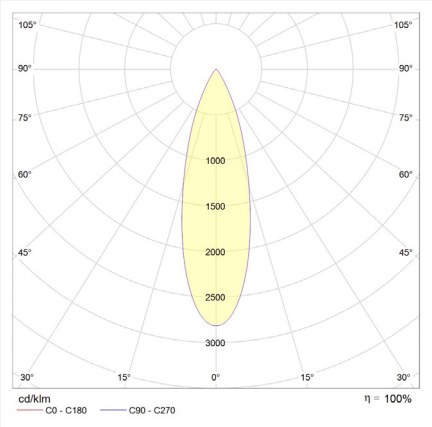

Sensor area

The sensor is located at the hole in the base of the lamp.

Dimming

Place the dimming pen in the sensor area. As soon as the green feedback LED lights up at the cable entry, the sensor is activated and the spotlight is dimmed. The dimming process stops by removing the pen. When the dimming pen is attached again, the dimming direction is changed. Your set dimming is automatically saved after approx. 5 - 10 seconds. The dimming range is flicker-free adjustable from 100% to 10% in 256 steps. (dimming frequency approx. 14 kHz)
The spotlight is set to 100% at initial start-up.

technical changes reserved | July 2023

LED spotlight C1-mini-LC-VL

part number: A400010

description:
LED spotlight for installation on magnetic track,
360° rotatable, 135° swivelling

housing colour:
aluminum anodised matte in black, silver, gold, champagne
(other surface finishing on request)

optics:
15°, 18°, 26°, 30°, 45°, 80°, 47°+25°, 40°+10°

light colour (+/- 100K):
~2,700 K, ~3,000 K, ~3,500 K, ~4,000 K, ~5,700 K

high power LED, high CRI DIN EN 55015:2013,
lifetime 50,000 hours | basis of lifetime L80B10

protection class: IP 20, protection class III, CE,
UL Listed No. E506729 - low voltage LED luminaire

luminous flux (~3,000 K | 30°):
~60 lm at ~1 W (60 lm/W)

power input: 12V DC (constant voltage)

allowed LED driver:
- power supply of PWM series by MeanWell
  with constant voltage 9 - 12V DC, class 2
- power supply of LPF, NPF or APV series by MeanWell
  with constant voltage 12V DC, class 2
  in combination with dimmer by feno
  (other power supplies on request)

dimming: external via potentiometer (incl.)

accessory: magnetic track

optional accessories:
magnetic track holders, anti-glare tube, honeycomb grid,
inclined tube, light diffusion foil, barn doors

dimensions

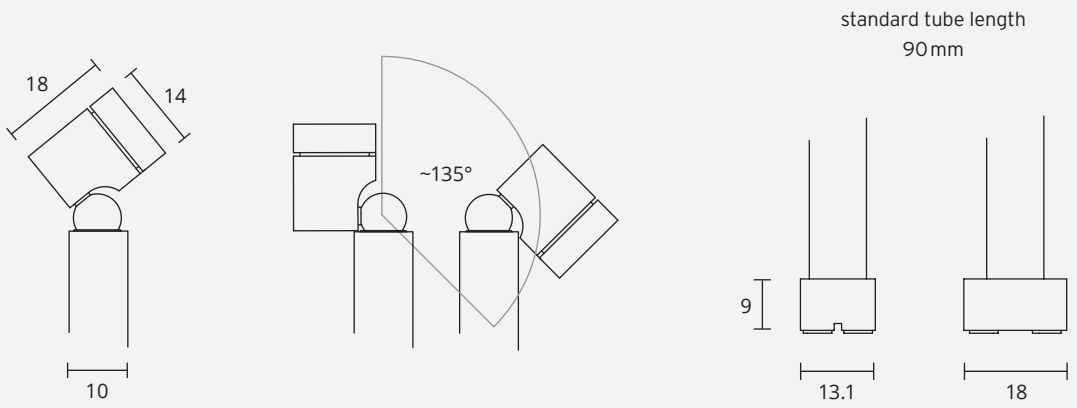

specification in mm

photometry

for light colour ~3,000 K | standard lens 30° | CRI typ. 97, R9 > 90, R12 > 90 | colour variation ≤ 3 SDCM

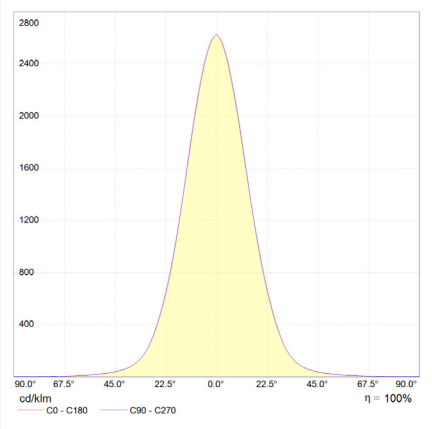

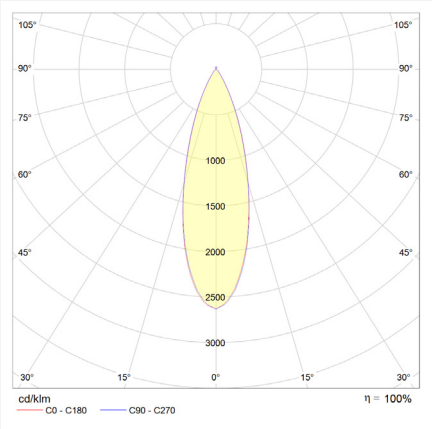

technical changes reserved | July 2023

LED spotlight C1-mini-R-SL

part number: A400011

description:
LED spotlight for installation on light bar R-SL-16,
180° rotatable, 55° swivelling

housing colour:
aluminum anodised matte in black, silver, gold, champagne
(other surface finishing on request)

optics:
8°, 15°, 18°, 26°, 30°, 45°, 80°, 47°+25°, 40°+10°

light colour (+/- 100K):
~2,700 K, ~3,000 K, ~3,500 K, ~4,000 K, ~5,700 K

high power LED, high CRI DIN EN 55015:2013,
lifetime 50,000 hours | basis of lifetime L80B10

protection class: IP 20, protection class III, CE,
UL Listed No. E506729 - low voltage LED luminaire

luminous flux (~3,000 K | 30°):
~60 lm at ~1.0 W (60 lm/W)
~110 lm at ~2.0 W (55 lm/W)

power input: 12V DC (constant voltage)

allowed LED driver:
power supply of LPF, NPF or APV series by MeanWell
with constant voltage 12V DC, class 2
(other power supplies on request)

dimming: on board with dimming pen (incl.)

accessory: LED light bar R-SL-16

optional accessories:
honeycomb grid, anti-glare tube, inclined tube,
snoot (8°), light diffusion foil, barn doors,
zoom optic (9° - 33°)

dimensions

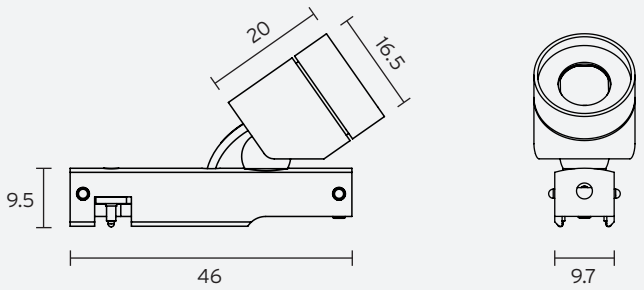

specification in mm

photometry

for light colour ~3,000 K | standard lens 30° | CRI typ. 97, R9 > 90, R12 > 90 | colour variation ≤ 3 SDCM

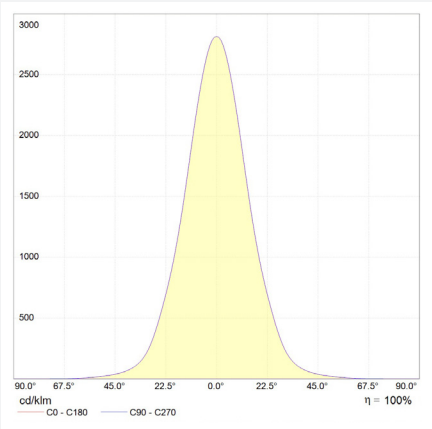

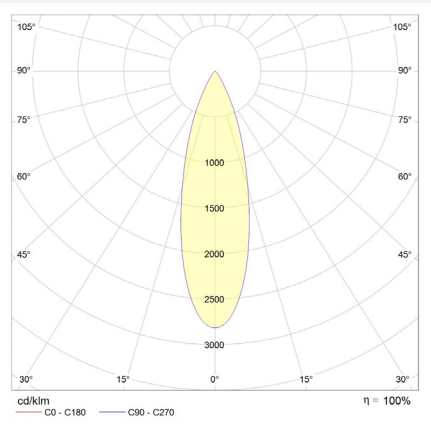

Sensor area

The sensor is located on the side of the cable entry in the lamp base. (Position depends on installation direction)

Dimming

Place the dimming pen in the sensor area. As soon as the green feedback LED lights up, the sensor is activated and the spotlight is dimmed. The dimming process stops by removing the pen. When the dimming pen is attached again, the dimming direction is changed. Your set dimming is automatically saved after approx. 5 - 10 seconds.
The dimming range is flicker-free adjustable from 100% to 10% in 256 steps. The spotlight is set to 100% at initial start-up.

technical changes reserved | July 2023

LED spotlight C1-mini-S

part number: A400012

description:
LED spotlight for installation in display cases,
360° rotatable, 135° swivelling,
with screw base or magnetic base

housing colour:
aluminum anodised matte in black, silver, gold, champagne
(other surface finishing on request)

optics:
15°, 18°, 26°, 30°, 45°, 80°, 47°+25°, 40°+10°

light colour (+/- 100K):
~2,700 K, ~3,000 K, ~3,500 K, ~4,000 K, ~5,700 K

high power LED, high CRI DIN EN 55015:2013,
lifetime 50,000 hours | basis of lifetime L80B10

protection class: IP 20, protection class III, CE,
UL Listed No. E506729 - low voltage LED luminaire

luminous flux (~3,000 K | 30° | 500 mA):
~130 lm at ~1.8 W (72 lm/W)

power input:
500 mA (constant current)

allowed LED driver:
LED driver for the Micro Jolly, Mini Jolly,
Maxi Jolly by TCI with constant current
(other LED driver on request)

dimming:
external via potentiometer (incl.)

optional accessories:
honeycomb grid, anti-glare tube, inclined tube,
light diffusion foil, barn doors

dimensions

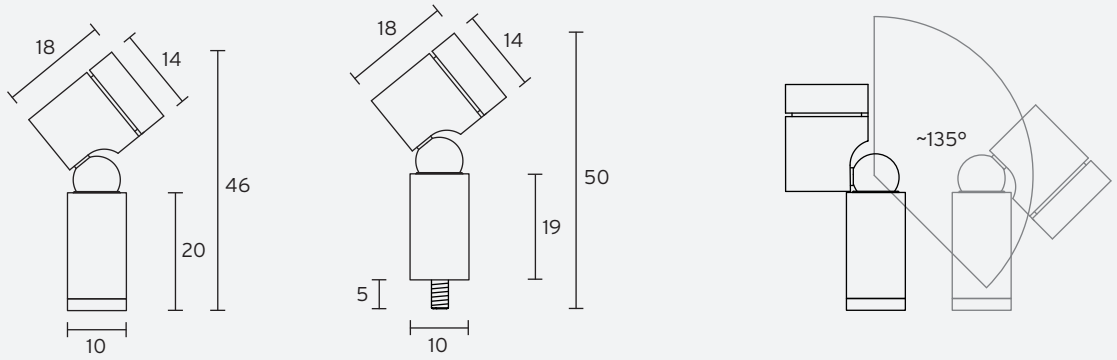

magnetic base

screw base (thread M3)

specification in mm

photometry

for light colour ~3,000 K | standard lens 30° | 500 mA | CRI typ. 97, R9 > 90, R12 > 90 | colour variation ≤ 3 SDCM

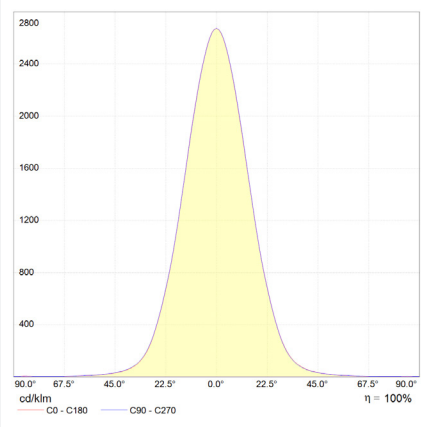

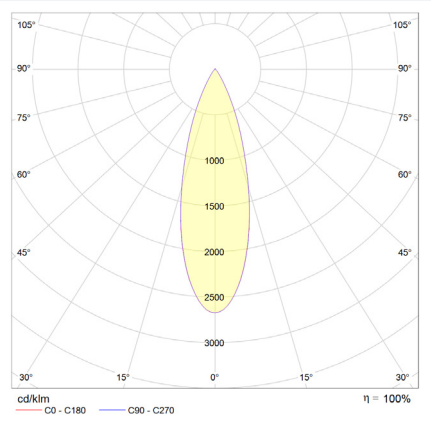

technical changes reserved | July 2023

LED spotlight C1-mini-S-VL

part number: A400013

description:
LED spotlight for installation in display cases,
360° rotatable, 135° swivelling,
attachment with mounting flange

housing colour:
aluminum anodised matte in black, silver, gold, champagne
(other surface finishing on request)

optics:
15°, 18°, 26°, 30°, 45°, 80°, 47°+25°, 40°+10°

light colour (+/- 100K):
~2,700 K, ~3,000 K, ~3,500 K, ~4,000 K, ~5,700 K

high power LED, high CRI DIN EN 55015:2013,
lifetime 50,000 hours | basis of lifetime L80B10

protection class: IP 20, protection class III, CE,
UL Listed No. E506729 - low voltage LED luminaire

luminous flux (~3,000 K | 30° | 500 mA):
~130 lm at ~1.8 W (72 lm/W)

power input:
500 mA (constant current)

allowed LED driver:
LED driver for the Micro Jolly, Mini Jolly,
Maxi Jolly by TCI with constant current
(other LED driver on request)

dimming:
external via potentiometer (incl.)

optional accessories:
honeycomb grid, anti-glare tube, inclined tube,
light diffusion foil, barn doors

dimensions

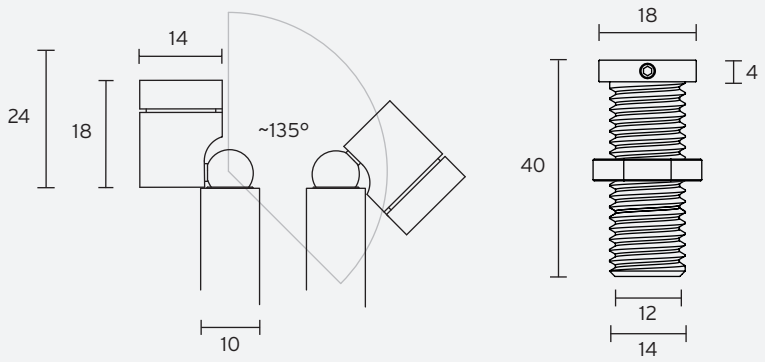

- standard tube length 440 mm (visible length 400 mm)
- minimum tube length 65 mm (visible length 25 mm)
- the length of the tube can be varied using the grub screw on the flange
- possible panel thicknesses 2 - 23 mm
- borehole Ø 15 mm

specification in mm

photometry

for light colour ~3,000 K | standard lens 30° | 500 mA | CRI typ. 97, R9 > 90, R12 > 90 | colour variation ≤ 3 SDCM

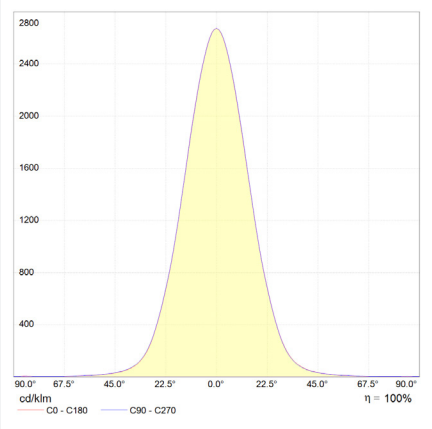

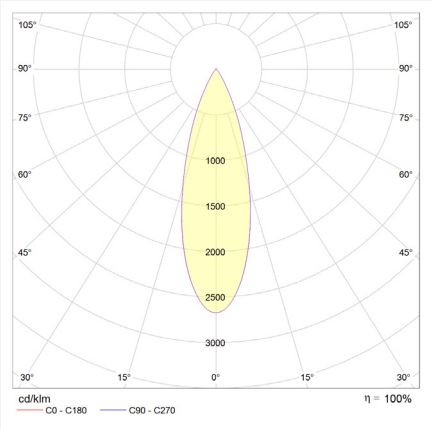

Variation (on request)
with 2 or 3 LED spotlights

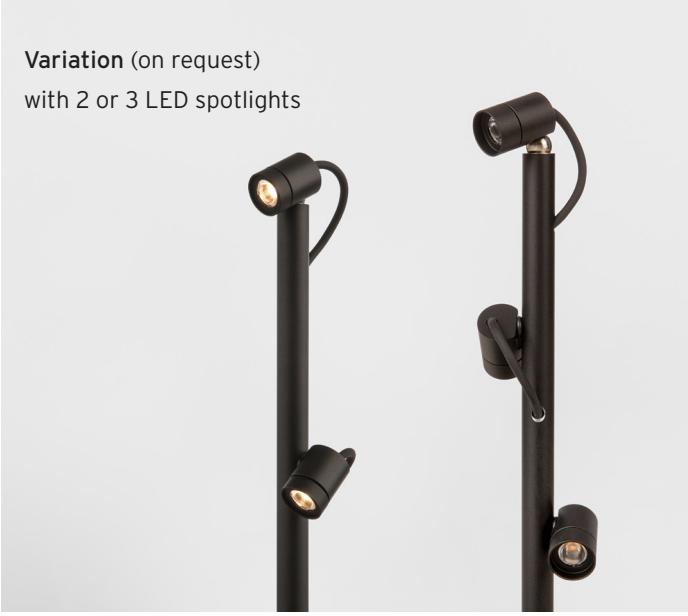

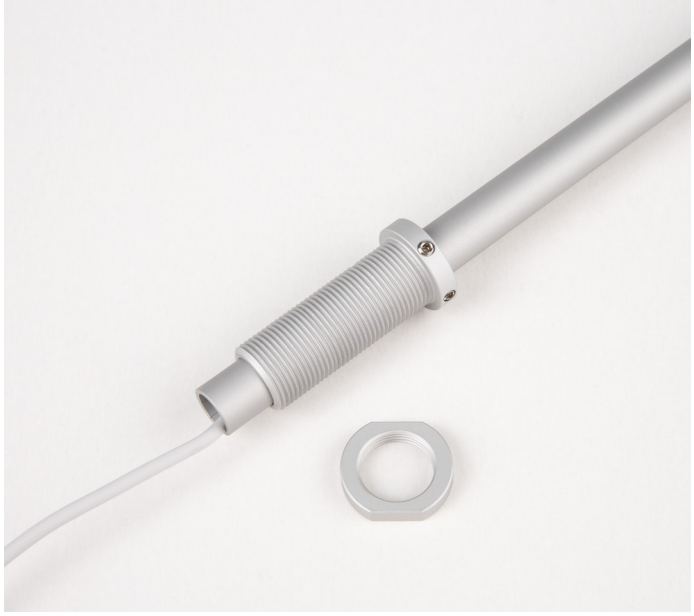

technical changes reserved | July 2023

LED spotlight C1-mini-UHC

part number: A400014

description:
LED spotlight for installation on magnetic track,
180° rotatable, 90° swivelling

housing colour:
aluminum anodised matte in black, silver, gold, champagne
(other surface finishing on request)

optics:
8°, 15°, 18°, 26°, 30°, 45°, 80°, 47°+25°, 40°+10°

light colour (+/- 100K):
~2,700 K, ~3,000 K, ~3,500 K, ~4,000 K, ~5,700 K

high power LED, high CRI DIN EN 55015:2013,
lifetime 50,000 hours | basis of lifetime L80B10

protection class: IP 20, protection class III, CE,
UL Listed No. E506729 - low voltage LED luminaire

luminous flux (~3,000 K | 30°):
~140 lm at ~2.3 W (61 lm/W)

power input: 12V DC (constant voltage)

allowed LED driver:
power supply of LPF, NPF or APV series by MeanWell
with constant voltage 12V DC, class 2
in combination with dimmer by feno
(other power supply on request)

dimming: external

accessory: magnetic track

optional accessories:
magnetic track holders,
honeycomb grid, anti-glare tube, inclined tube,
snoot (8°), light diffusion foil, barn doors,
zoom optic (9° - 33°)

dimensions

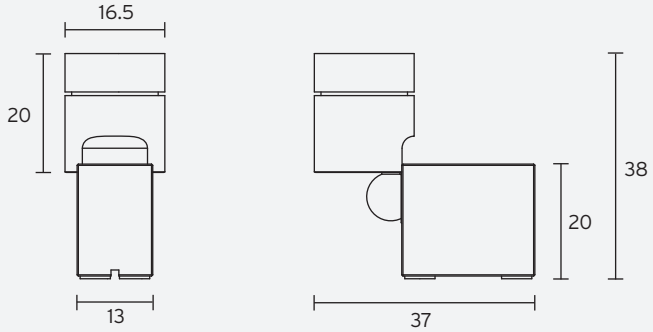

specification in mm

photometry

for light colour ~3,000 K | standard lens 30° | CRI typ. 97, R9 > 90, R12 > 90 | colour variation ≤ 3 SDCM

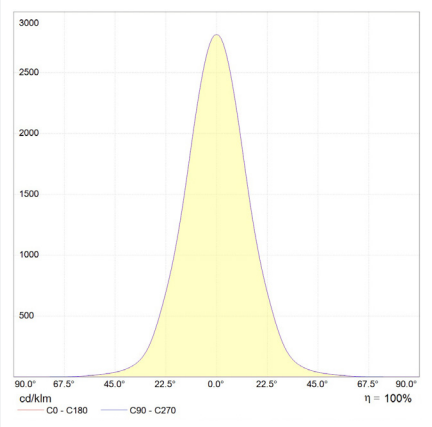

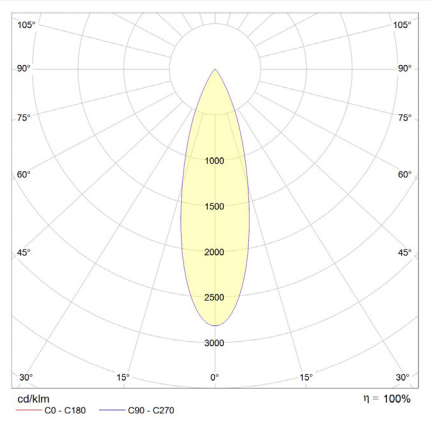

technical changes reserved | July 2023

LED spotlight C1-S

part number: A400017

description:
LED spotlight for installation in display cases,
360° rotatable, 180° swivelling,
with screw base or magnetic base

housing colour:
aluminum anodised matte in black, silver, gold, champagne
(other surface finishing on request)

optics:
10°, 15°, 20°, 35°, 45°, 80°, 46°+ 10°

light colour (+/- 100K):
~2,700 K, ~3,000 K, ~3,500 K, ~4,000 K, ~5,700 K

high power LED, high CRI DIN EN 55015:2013,
lifetime 50,000 hours | basis of lifetime L80B10

protection class: IP 20, protection class III, CE,
UL Listed No. E506729 - low voltage LED luminaire

luminous flux (~3,000 K | 20° | 500 mA):
~150 lm at ~2.1 W (71 lm/W)

power input:
500 mA (constant current)

allowed LED driver:
LED driver for the Micro Jolly, Mini Jolly,
Maxi Jolly by TCI with constant current
(other LED driver on request)

dimming:
external via potentiometer (incl.)

optional accessories:
honeycomb grid, anti-glare tube, inclined tube,
light diffusion foil, barn doors,
zoom optic (2° - 25°, 6° - 36°)

dimensions

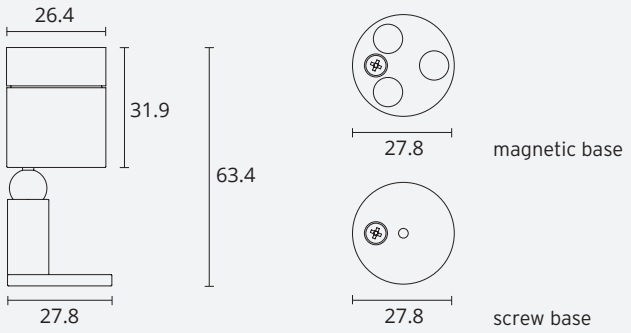

specification in mm

photometry

for light colour ~3,000 K | standard lens 20° | 500 mA | CRI typ. 97, R9 > 90, R12 > 90 | colour variation ≤ 3 SDCM

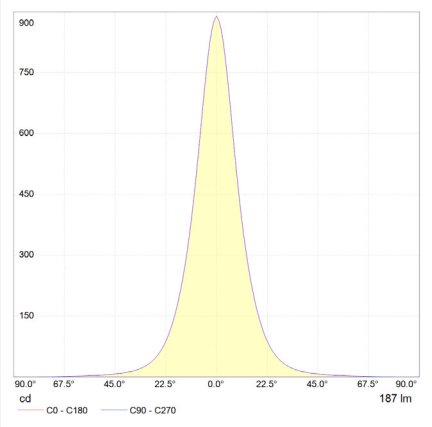

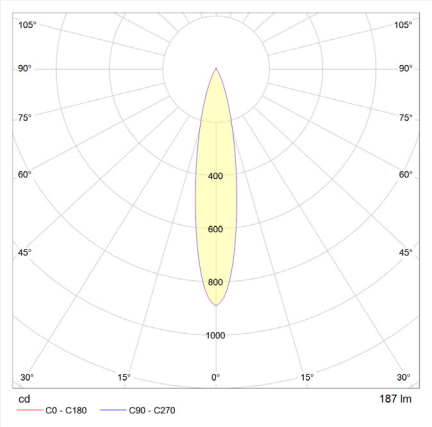

technical changes reserved | July 2023

LED spotlight C1-STS

part number: A400018

description:
LED spotlight for installation on magnetic track,
180° rotatable, 90° swivelling

housing colour:
aluminum anodised matte in black, silver, gold, champagne
(other surface finishing on request)

optics:
10°, 15°, 20°, 35°, 45°, 80°, 46°+ 10°

light colour (+/- 100K):
~2,700 K, ~3,000 K, ~3,500 K, ~4,000 K, ~5,700 K

high power LED, high CRI DIN EN 55015:2013,
lifetime 50,000 hours | basis of lifetime L80B10

protection class: IP 20, protection class III, CE,
UL Listed No. E506729 - low voltage LED luminaire

luminous flux (~3,000 K | 20°):
~110 lm at~2,0 W (55 lm/W)

power input: 12 V DC (constant voltage)

allowed LED driver:
power supply of LPF, NPF or APV series by MeanWell
with constant voltage 12V DC, class 2
(other power supplies on request)

dimming: on board

accessory: magnetic track

optional accessories:
magnetic track holders,
honeycomb grid, anti-glare tube, inclined tube,
light diffusion foil, barn doors,
zoom optic (2° - 25°, 6° - 36°)

dimensions

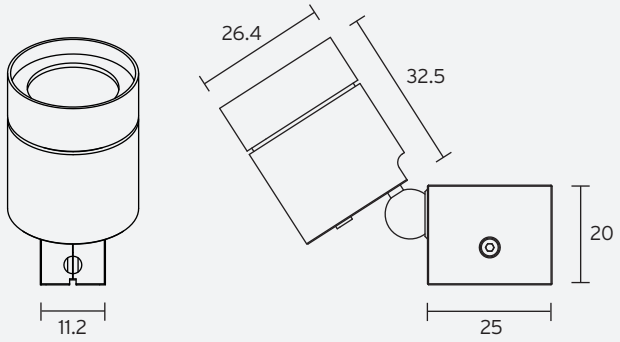

specification in mm

photometry

for light colour ~3,000 K | standard lens 20° | CRI typ. 97, R9 > 90, R12 > 90 | colour variation ≤ 3 SDCM

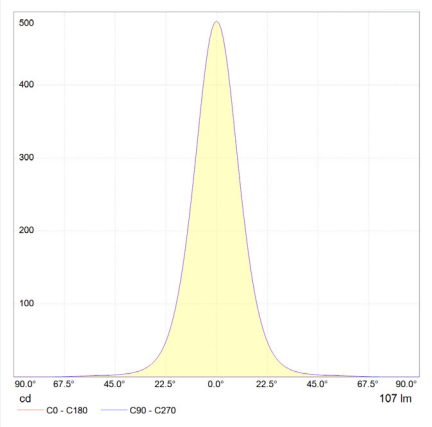

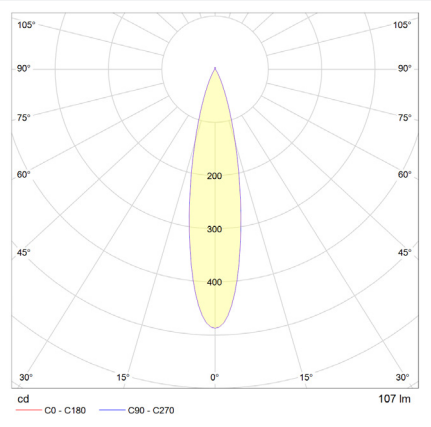

Dimming

The LED spotlight is controlled by a microcontroller and can be dimmed individually using a button **(1)** on the spotlight head.

Pressing on the dimming button (> 1 sec.) changes the dimming value. Releasing the button stops the dimming process. Pressing it again changes the dimming direction. Your set dimming is automatically saved after approx. 5 - 10 seconds.
The dimming range is flicker-free adjustable from 100% to 10% in 256 steps. The spotlight is set to 100% at initial start-up.

technical changes reserved | July 2023

LED spotlight C1-USTS

part number: A400019

description:
LED spotlight for installation on magnetic track,
180° rotatable, 90° swivelling

housing colour:
aluminum anodised matte in black, silver, gold, champagne
(other surface finishing on request)

optics:
10°, 15°, 20°, 35°, 45°, 80°, 46°+ 10°

light colour (+/- 100K):
~2,700 K, ~3,000 K, ~3,500 K, ~4,000 K, ~5,700 K

high power LED, high CRI DIN EN 55015:2013,
lifetime 50,000 hours | basis of lifetime L80B10

protection class: IP 20, protection class III, CE,
UL Listed No. E506729 - low voltage LED luminaire

luminous flux (~3,000 K | 20°):
~130 lm at ~2,5 W (52 lm/W)

power input: 12V DC (constant voltage)

allowed LED driver:
power supply of LPF, NPF or APV series by MeanWell
with constant voltage 12V DC, class 2
in combination with dimmer by feno
(other power supplies on request)

dimming: external

accessory: magnetic track

optional accessories:
magnetic track holders,
honeycomb grid, anti-glare tube, inclined tube,
light diffusion foil, barn doors,
zoom optic (2° - 25°, 6° - 36°)

dimensions

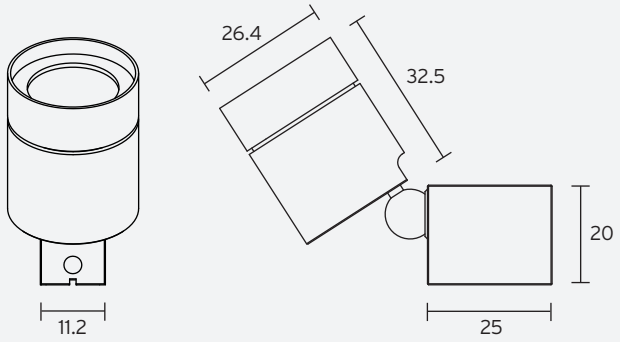

specification in mm

photometry

for light colour ~3,000 K | standard lens 20° | CRI typ. 97, R9 > 90, R12 > 90 | colour variation ≤ 3 SDCM

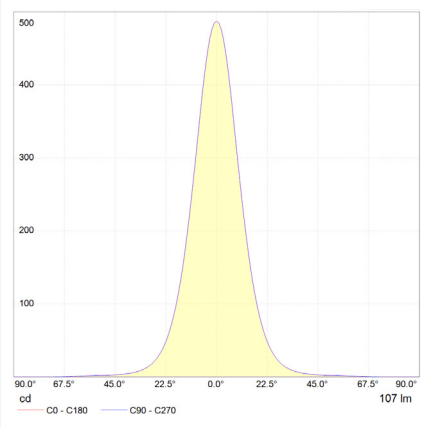

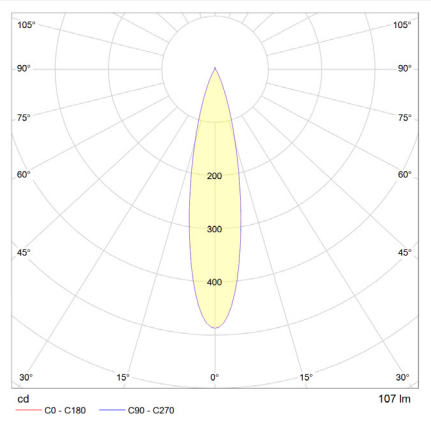

technical changes reserved | July 2023

LED spotlight C1-VL

part number: A400020

description:
LED spotlight for installation in display cases,
360° rotatable, 125° swivelling,
attachment with mounting flange

housing colour:
aluminum anodised matte in black, silver, gold, champagne
(other surface finishing on request)

optics:
10°, 15°, 20°, 35°, 45°, 80°, 46°+ 10°

light colour (+/- 100K):
~2,700 K, ~3,000 K, ~3,500 K, ~4,000 K, ~5,700 K

high power LED, high CRI DIN EN 55015:2013,
lifetime 50,000 hours | basis of lifetime L80B10

protection class: IP 20, protection class III, CE,
UL Listed No. E506729 - low voltage LED luminaire

luminous flux (~3,000 K | 20° | 500 mA):
~150 lm at ~2.1 W (71 lm/W)

power input:
500 mA (constant current)

allowed LED driver:
LED driver for the Micro Jolly, Mini Jolly,
Maxi Jolly by TCI with constant current
(other LED driver on request)

dimming:
external via potentiometer (incl.)

optional accessories:
honeycomb grid, anti-glare tube, inclined tube,
light diffusion foil, barn doors,
zoom optic (2° - 25°, 6° - 36°)

dimensions

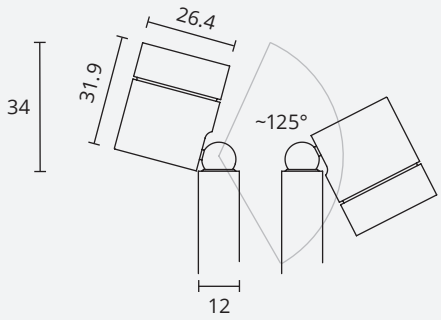

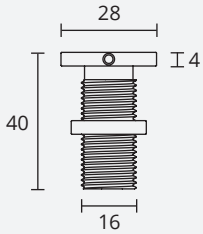

- standard tube length 440 mm (visible length 400 mm)
- minimum tube length 65 mm (visible length 25 mm)
- the length of the tube can be varied using the grub screw on the flange
- possible panel thicknesses 2 - 23 mm
- borehole Ø 17 mm

specification in mm

photometry

for light colour ~3,000 K | standard lens 20° | 500 mA | CRI typ. 97, R9 > 90, R12 > 90 | colour variation ≤ 3 SDCM

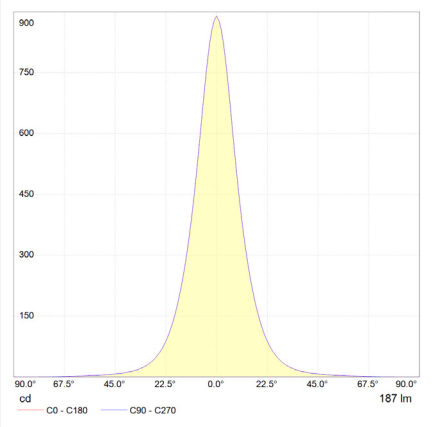

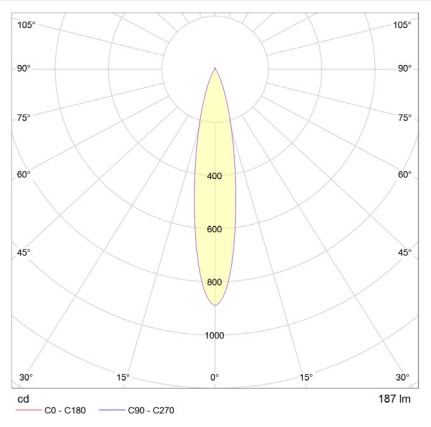

technical changes reserved | July 2023

LED spotlight C2-C with single lens (Casambi Control)

part number: A400031

description:
LED spotlight for installation on magnetic track,
180° rotatable, 90° swivelling

housing colour:
aluminum anodised matte in black, silver, gold, champagne
(other surface finishing on request)

optics:
14°, 25°, 60°, 40°+ 15°

light colour (+/- 100K):
~2,700 K, ~3,000 K, ~3,500 K, ~4,000 K, ~5,700 K

high power LED, high CRI DIN EN 55015:2013,
lifetime 50,000 hours | basis of lifetime L80B10

protection class: IP 20, protection class III, CE,
ETSI EN 300 328 V2.2.2,
UL Listed No. E506729 - low voltage LED luminaire

luminous flux (~3,000 K | 25°):
~260 lm at ~4.5 W (58 lm/W)

power input:
9 - 24V DC

allowed LED driver:
power supply of LPF, NPF or APV series by MeanWell
with constant voltage 12V DC, class 2
(other power supplies on request)

dimming: via Casambi-App

accessory: magnetic track

optional accessories:
magnetic track holders,
honeycomb grid, anti-glare tube, inclined tube,
snoot (7°), light diffusion foil, barn doors

dimensions

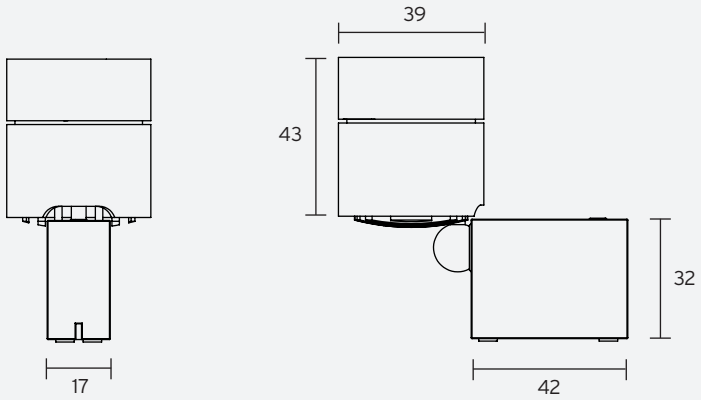

specification in mm

photometry

for light colour ~3,000 K | standard lens 25° | CRI typ. 97, R9 > 90, R12 > 90 | colour variation ≤ 3 SDCM

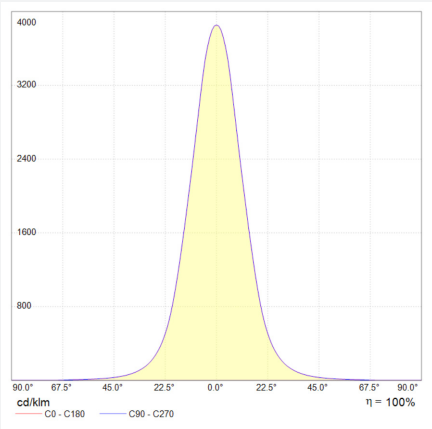

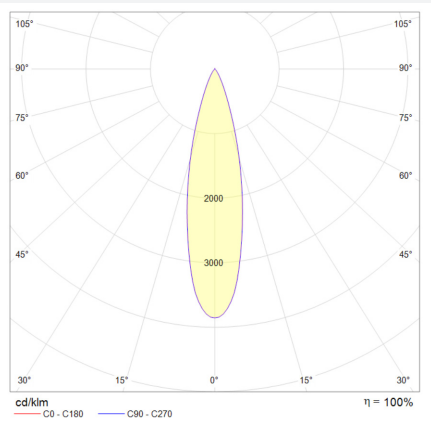

Dimming

The C1-mini-C spotlight is controlled via the Casambi app. The set value is automatically saved and retained even after a power cut. The dimming range has 810 steps (flicker-free) from 100% to 0.4%.
The dimming frequency is approx. 14 kHz.

The Casambi app can be freely downloaded from the App Store or Google Play. After opening, the app automatically finds all Casambi-operated spotlights.
Tap on Add *All luminaires to ... / My network*. All spotlights are connected into a network and the *Luminaires* menu opens automatically. (To switch on or off - tap the symbol; to dim - swipe horizontally over the symbol)

technical changes reserved | July 2023

LED spotlight C2-C with triple lens (Casambi Control)

part number: A400032

description:
LED spotlight for installation on magnetic track,
180° rotatable, 90° swivelling

housing colour:
aluminum anodised matte in black, silver, gold, champagne
(other surface finishing on request)

optics:
18°, 25°, 32°, 67°

light colour (+/- 100K):
~2,700 K, ~3,000 K, ~3,500 K, ~4,000 K, ~5,700 K

high power LED, high CRI DIN EN 55015:2013,
lifetime 50,000 hours | basis of lifetime L80B10

protection class: IP 20, protection class III, CE,
ETSI EN 300 328 V2.2.2,
UL Listed No. E506729 - low voltage LED luminaire

luminous flux (~3,000 K | 25°):
~310 lm at ~4.5 W (69 lm/W)

power input:
9 - 24V DC

allowed LED driver:
power supply of LPF, NPF or APV series by MeanWell
with constant voltage 12V DC, class 2
(other power supplies on request)

dimming: via Casambi-App

accessory: magnetic track

optional accessories:
magnetic track holders,
honeycomb grid, anti-glare tube, inclined tube,
snoot (7°), light diffusion foil, barn doors

dimensions

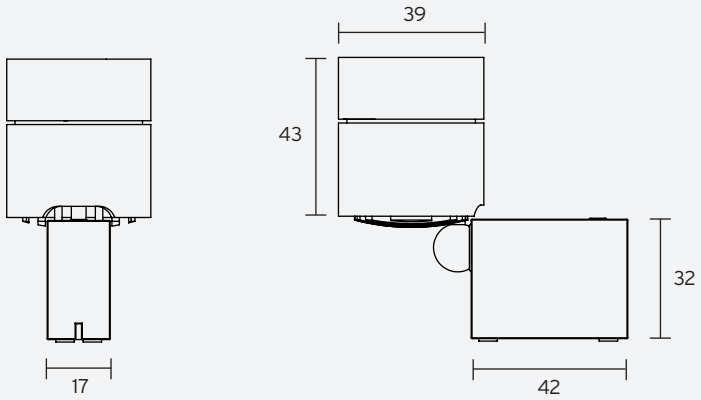

specification in mm

photometry

for light colour ~3,000 K | standard lens 25° | CRI typ. 97, R9 > 90, R12 > 90 | colour variation ≤ 3 SDCM

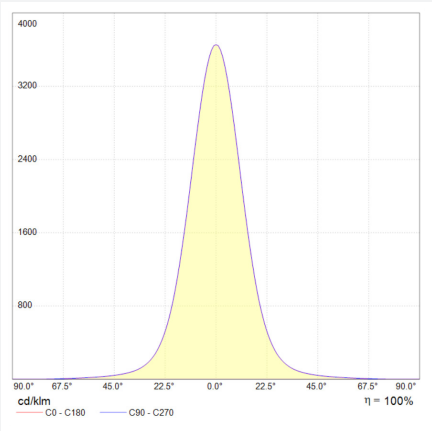

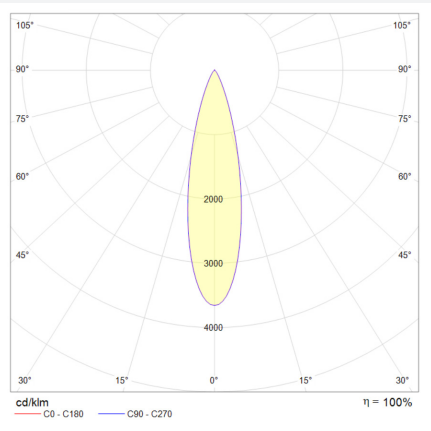

Dimming

The C1-mini-C spotlight is controlled via the Casambi app. The set value is automatically saved and retained even after a power cut. The dimming range has 810 steps (flicker-free) from 100% to 0.4%.
The dimming frequency is approx. 14 kHz.

The Casambi app can be freely downloaded from the App Store or Google Play. After opening, the app automatically finds all Casambi-operated spotlights.
Tap on Add *All luminaires to ... / My network*. All spotlights are connected into a network and the *Luminaires* menu opens automatically. (To switch on or off - tap the symbol; to dim - swipe horizontally over the symbol)

technical changes reserved | July 2023

LED spotlight C2-S with single lens

part number: A400021

description:
LED spotlight for installation in display cases,
360° rotatable, 180° swivelling,
with screw base or magnetic base

housing colour:
aluminum anodised matte in black, silver, gold, champagne
(other surface finishing on request)

optics:
14°, 25°, 60°, 40°+ 15°

light colour (+/- 100K):
~2,700 K, ~3,000 K, ~3,500 K, ~4,000 K, ~5,700 K

high power LED, high CRI DIN EN 55015:2013,
lifetime 50,000 hours | basis of lifetime L80B10

protection class: IP 20, protection class III, CE,
UL Listed No. E506729 - low voltage LED luminaire

luminous flux (~3,000 K | 25° | 1050 mA):
~260 lm at ~4.5 W (58 lm/W)

power input:
1050 mA (constant current)

allowed LED driver:
LED driver for Maxi Jolly by TCI and
eldoLED SOLOdrive 161/B with constant current
(other LED driver on request)

dimming:
external via potentiometer (incl.)

optional accessories:
honeycomb grid, anti-glare tube, inclined tube,
snoot (7°),
light diffusion foil,
barn doors

dimensions

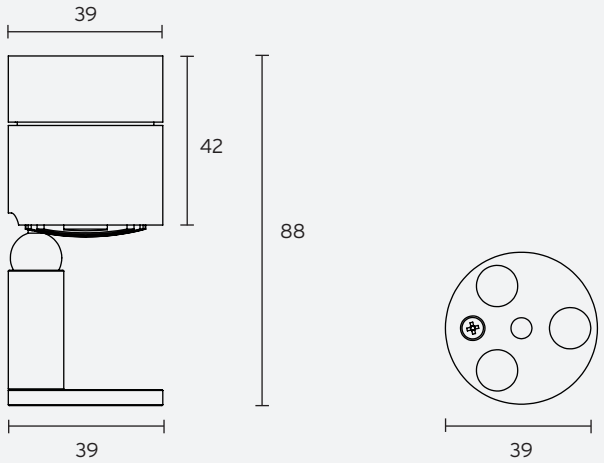

specification in mm

photometry

for light colour ~3,000 K | standard lens 25° | 1050 mA | CRI typ. 97, R9 > 90, R12 > 90 | colour variation ≤ 3 SDCM

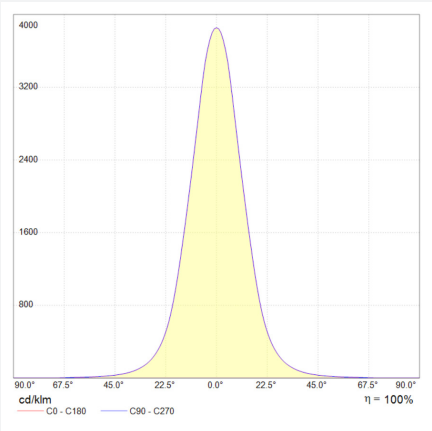

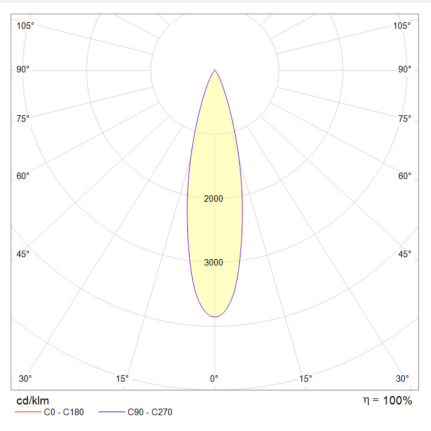

technical changes reserved | July 2023

LED spotlight C2-S with triple lens

part number: A400022

description:
LED spotlight for installation in display cases,
360° rotatable, 180° swivelling,
with screw base or magnetic base

housing colour:
aluminum anodised matte in black, silver, gold, champagne
(other surface finishing on request)

optics:
18°, 25°, 32°, 67°

light colour (+/- 100K):
~2,700 K, ~3,000 K, ~3,500 K, ~4,000 K, ~5,700 K

high power LED, high CRI DIN EN 55015:2013,
lifetime 50,000 hours | basis of lifetime L80B10

protection class: IP 20, protection class III, CE,
UL Listed No. E506729 - low voltage LED luminaire

luminous flux (~3,000 K | 25° | 500 mA):
~310 lm at ~4.5 W (69 lm/W)

power input:
500 mA (constant current)

allowed LED driver:
LED driver for the Micro Jolly, Mini Jolly,
Maxi Jolly by TCI with constant current
(other LED driver on request)

dimming:
external via potentiometer (incl.)

optional accessories:
honeycomb grid, anti-glare tube, inclined tube,
snoot (7°),
light diffusion foil,
barn doors

dimensions

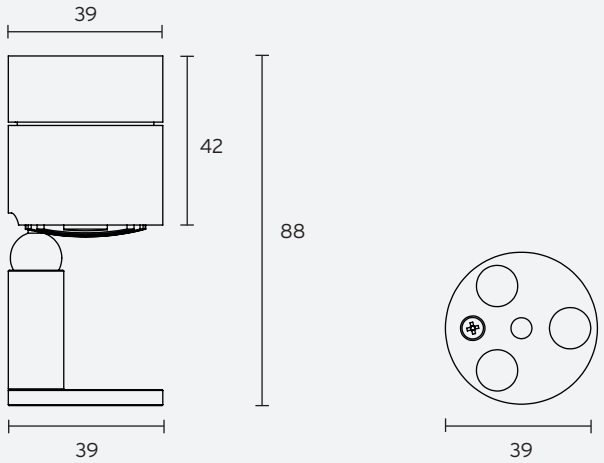

specification in mm

photometry

for light colour ~3,000 K | standard lens 25° | 500 mA | CRI typ. 97, R9 > 90, R12 > 90 | colour variation ≤ 3 SDCM

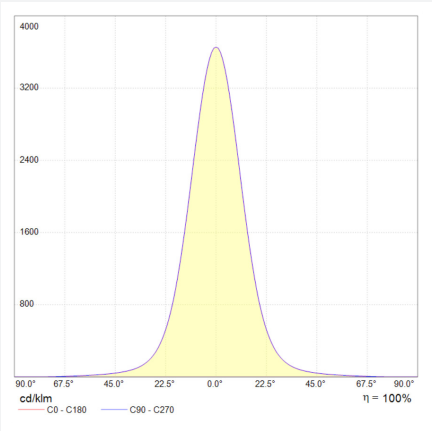

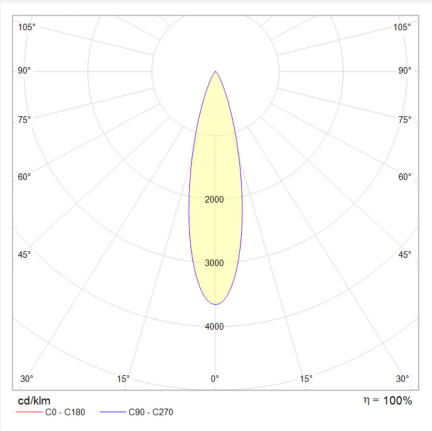

technical changes reserved | July 2023

LED spotlight C2-STS with single lens

part number: A400023

description:
LED spotlight for installation on magnetic track,
180° rotatable, 90° swivelling

housing colour:
aluminum anodised matte in black, silver, gold, champagne
(other surface finishing on request)

optics:
14°, 25°, 60°, 40°+ 15°

light colour (+/- 100K):
~2,700 K, ~3,000 K, ~3,500 K, ~4,000 K, ~5,700 K

high power LED, high CRI DIN EN 55015:2013,
lifetime 50,000 hours | basis of lifetime L80B10

protection class:
IP 20, protection class III, CE,
UL Listed No. E506729 - low voltage LED luminaire

luminous flux (~3,000 K | 25°):
~260 lm at ~4.5 W (58 lm/W)

power input:
12V DC (constant voltage)

allowed LED driver:
power supply of LPF, NPF or APV series by MeanWell
with constant voltage 12V DC, class 2
(other power supplies on request)

dimming: on board

accessory: magnetic track

optional accessories:
magnetic track holders,
honeycomb grid, anti-glare tube, inclined tube,
snoot (7°), light diffusion foil, barn doors

dimensions

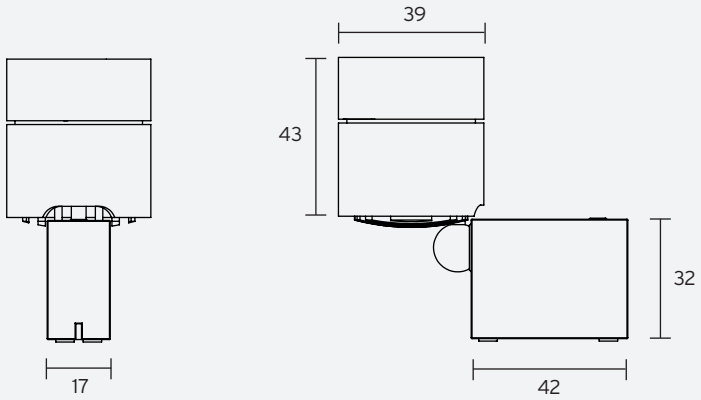

specification in mm

photometry

for light colour ~3,000 K | standard lens 25° | CRI typ. 97, R9 > 90, R12 > 90 | colour variation ≤ 3 SDCM

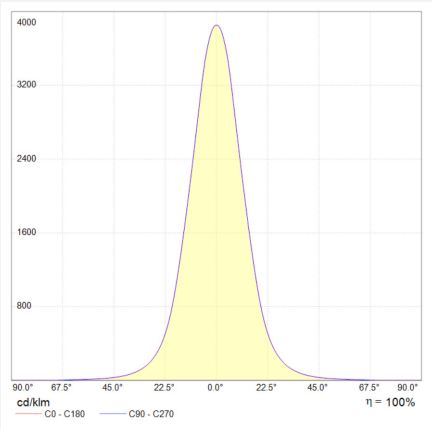

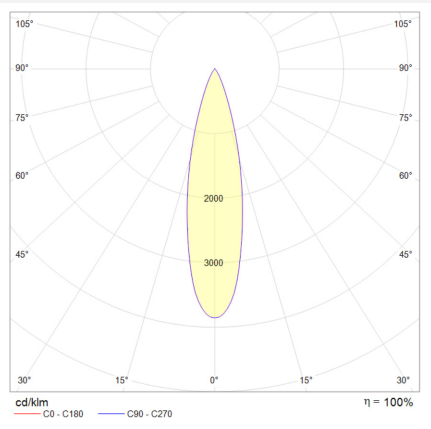

Dimming

The LED spotlight is controlled by a microcontroller and can be dimmed individually using a button **(1)** on the spotlight foot.

Pressing on the dimming button (> 1 sec.) changes the dimming value. Releasing the button stops the dimming process. Pressing it again changes the dimming direction. Your set dimming is automatically saved after approx. 5 - 10 seconds.
The dimming range is flicker-free adjustable from 100% to 10% in 256 steps. The spotlight is set to 100% at initial start-up.

technical changes reserved | July 2023

LED spotlight C2-STS with triple lens

part number: A400024

description:
LED spotlight for installation on magnetic track,
180° rotatable, 90° swivelling

housing colour:
aluminum anodised matte in black, silver, gold, champagne
(other surface finishing on request)

optics:
18°, 25°, 32°, 67°

light colour (+/- 100K):
~2,700 K, ~3,000 K, ~3,500 K, ~4,000 K, ~5,700 K

high power LED, high CRI DIN EN 55015:2013,
lifetime 50,000 hours | basis of lifetime L80B10

protection class:
IP 20, protection class III, CE,
UL Listed No. E506729 - low voltage LED luminaire

luminous flux (~3,000 K | 25°):
~310 lm at ~4.5 W (69 lm/W)

power input:
12V DC (constant voltage)

allowed LED driver:
power supply of LPF, NPF or APV series by MeanWell
with constant voltage 12V DC, class 2
(other power supplies on request)

dimming: on board

accessory: magnetic track

optional accessories:
magnetic track holders,
honeycomb grid, anti-glare tube, inclined tube,
snoot (7°), light diffusion foil, barn doors

dimensions

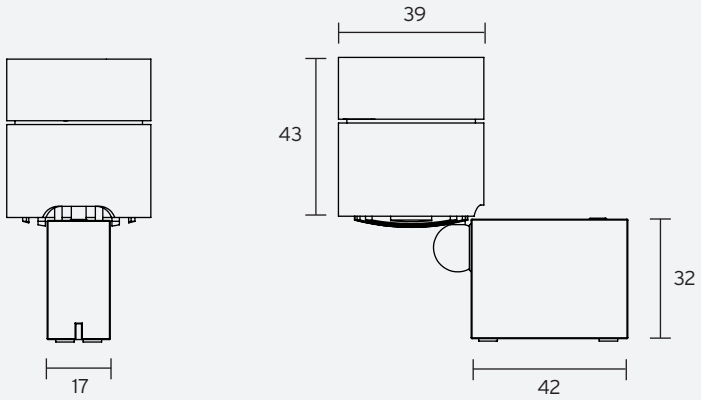

specification in mm

photometry

for light colour ~3,000 K | standard lens 25° | CRI typ. 97, R9 > 90, R12 > 90 | colour variation ≤ 3 SDCM

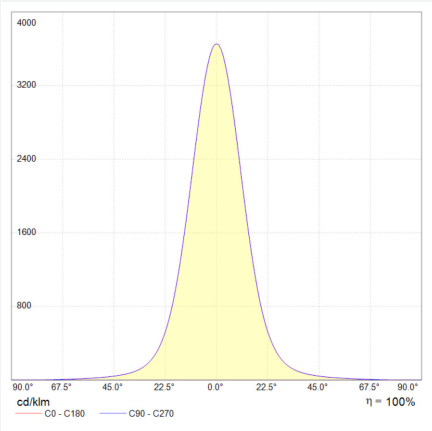

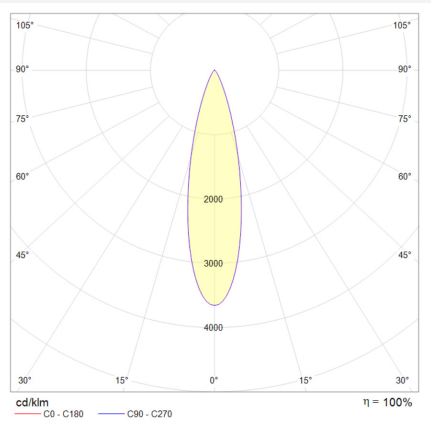

Dimming

The LED spotlight is controlled by a microcontroller and can be dimmed individually using a button **(1)** on the spotlight foot.

Pressing on the dimming button (> 1 sec.) changes the dimming value. Releasing the button stops the dimming process. Pressing it again changes the dimming direction. Your set dimming is automatically saved after approx. 5 - 10 seconds.
The dimming range is flicker-free adjustable from 100% to 10% in 256 steps. The spotlight is set to 100% at initial start-up.

technical changes reserved | July 2023

LED light bar R1

A400101

description:	LED light bar, profile Ø 10 mm, mountable magnetic, rotatable 360°
housing colour:	aluminum anodised black, silver, gold
LED:	**mid power LED, high CRI** DIN EN 55015:2013, lifetime 50,000 hours | basis of lifetime L80B10
protection class:	IP 20, protection class III, CE, UL Listed No. E506729 - low voltage LED luminaire
power input:	24V DC (constant voltage)
allowed LED supply:	power supplies by eldoLED or MeanWell with constant voltage 24V DC, class 2 (other power supplies on request)
dimming:	external
optional accessories:	anti-glare profile 13.6 x 13.6 mm, anodised aluminum or powder-coated according to RAL

R1	optic (linear optic satined)	light colour (+/- 100 K)	LED	luminous flux (~3.000 K | ~50°)
7 W	~50° and ~60° beam angle	~3,000 K, ~4,000 K	240 LEDs/m (smallest separable unit 25 mm)	~400 lm/m at ~7 W/m (57 lm/W)
15 W	~50° und ~60° beam angle	~2,700 K, ~3,000 K, ~3,500 K, ~4,000 K, Tunable White ~2,700 K - 6,500 K	240 LEDs/m (smallest separable unit 25 mm)	~900 lm/m at ~15 W/m (60 lm/W)
	~70° beam angle	~3,000 K, ~4,000 K	210 LEDs/m (smallest separable unit 25 mm)	~900 lm/m at ~15 W/m (60 lm/W)
20 W	~50° und ~60° beam angle	~3,000 K, ~4,000 K	240 LEDs/m (smallest separable unit 25 mm)	~1300 lm/m at ~20 W/m (65 lm/W)

dimensions

length: individual cut from 100 mm to 3,000 mm

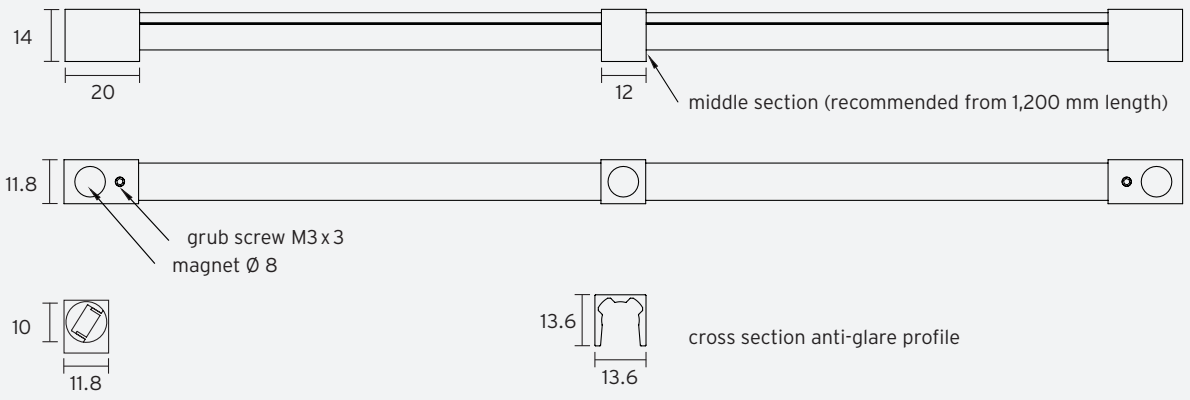

specification in mm

photometry

for light colour ~3,000 K | linear optics ~50° | CRI typ. 97, R9 > 90, R12 > 90 | colour variation ≤ 3 SDCM

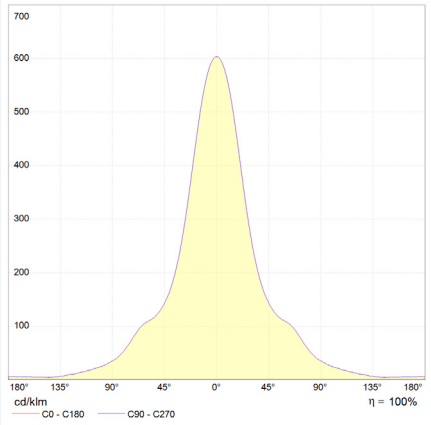

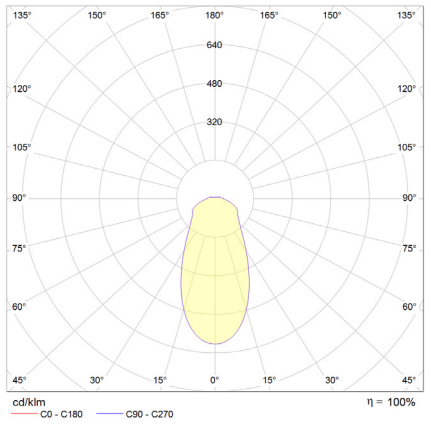

technical changes reserved | February 2023

LED light bar R1-T

A400103

description:	LED light bar for table, profile Ø 10 mm, 360° rotatable
housing colour:	aluminum anodised black, silver, gold
LED:	**mid power LED, high CRI** DIN EN 55015:2013, lifetime 50,000 hours | basis of lifetime L80B10
protection class:	IP 20, protection class III, CE, UL Listed No. E506729 - low voltage LED luminaire
power input:	24V DC (constant voltage)
allowed LED supply:	power supplies by eldoLED or MeanWell with constant voltage 24V DC, class 2 (other power supplies on request)
dimming:	external
optional accessories:	anti-glare profile 13.6 x 13.6 mm, anodised aluminum or powder-coated according to RAL

R1	optic (linear optic satined)	light colour (+/- 100 K)	LED	luminous flux (~3.000 K | ~50°)
7 W	~50° and ~60° beam angle	~3,000 K, ~4,000 K	240 LEDs/m (smallest separable unit 25 mm)	~400 lm/m at ~7 W/m (57 lm/W)
15 W	~50° und ~60° beam angle	~2,700 K, ~3,000 K, ~3,500 K, ~4,000 K, Tunable White ~2,700 K - 6,500 K	240 LEDs/m (smallest separable unit 25 mm)	~900 lm/m at ~15 W/m (60 lm/W)
	~70° beam angle	~3,000 K, ~4,000 K	210 LEDs/m (smallest separable unit 25 mm)	~900 lm/m at ~15 W/m (60 lm/W)
20 W	~50° und ~60° beam angle	~3,000 K, ~4,000 K	240 LEDs/m (smallest separable unit 25 mm)	~1300 lm/m at ~20 W/m (65 lm/W)

dimensions

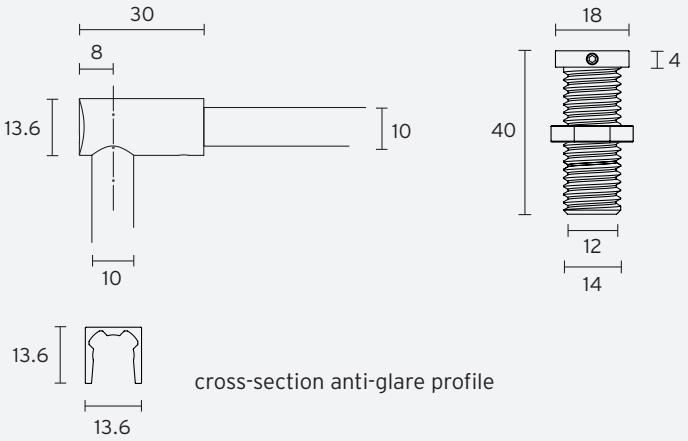

cross-section anti-glare profile

- length: individual cut from 100 mm to 3,000 mm
- center support recommended from 1,200 mm length
- standard extension max. 440 mm (max. visible length 400 mm)
- can be shortened on request
- additional height adjustable via flange
- panel thickness 2 - 23 mm
- borehole Ø 14.5 mm

specification in mm

photometry

for light colour ~3,000 K | linear optics ~50° | CRI typ. 97, R9 > 90, R12 > 90 | colour variation ≤ 3 SDCM

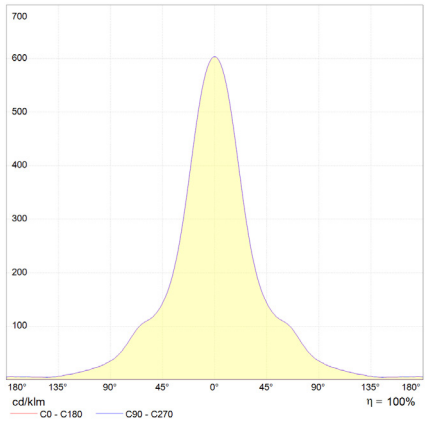

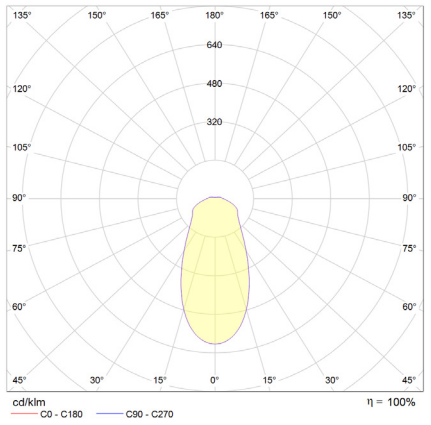

technical changes reserved | February 2023

LED light bar R1-TG

A400105

description:	LED light bar for table, profile Ø 10 mm, 360° rotatable
housing colour:	aluminum anodised black, silver, gold
LED:	**mid power LED, high CRI** DIN EN 55015:2013, lifetime 50,000 hours | basis of lifetime L80B10
protection class:	IP 20, protection class III, CE, UL Listed No. E506729 - low voltage LED luminaire
power input:	24V DC (constant voltage)
allowed LED supply:	power supplies by eldoLED or MeanWell with constant voltage 24V DC, class 2 (other power supplies on request)
dimming:	external

R1	optic (linear optic satined)	light colour (+/- 100 K)	LED	luminous flux (~3.000 K | ~50°)
7 W	~50° and ~60° beam angle	~3,000 K, ~4,000 K	240 LEDs/m (smallest separable unit 25 mm)	~400 lm/m at ~7 W/m (57 lm/W)
15 W	~50° und ~60° beam angle	~2,700 K, ~3,000 K, ~3,500 K, ~4,000 K, Tunable White ~2,700 K - 6,500 K	240 LEDs/m (smallest separable unit 25 mm)	~900 lm/m at ~15 W/m (60 lm/W)
	~70° beam angle	~3,000 K, ~4,000 K	210 LEDs/m (smallest separable unit 25 mm)	~900 lm/m at ~15 W/m (60 lm/W)
20 W	~50° und ~60° beam angle	~3,000 K, ~4,000 K	240 LEDs/m (smallest separable unit 25 mm)	~1300 lm/m at ~20 W/m (65 lm/W)

dimensions

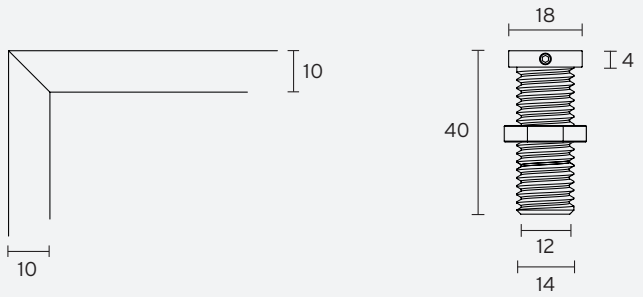

- length: individual cut from 100 mm to 3,000 mm
- center support recommended from 1,200 mm length
- standard extension max. 440 mm (max. visible length 400 mm)
- can be shortened on request
- additional height adjustable via flange
- panel thickness 2 - 23 mm
- borehole Ø 14.5 mm

specification in mm

photometry

for light colour ~3,000 K | linear optics ~50° | CRI typ. 97, R9 > 90, R12 > 90 | colour variation ≤ 3 SDCM

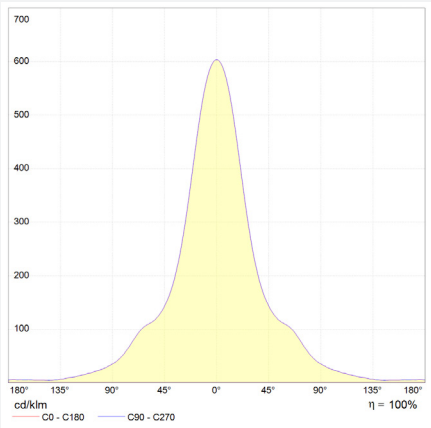

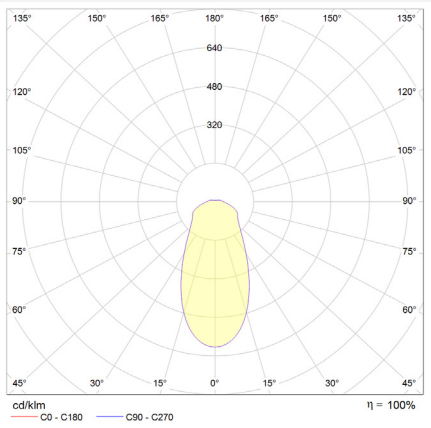

technical changes reserved | February 2023

LED light bar R-SL-16

A400111

description:	LED light bar, profile Ø 16 mm, 360° rotatable, mounting for screwing or magnetic
housing colour:	aluminum anodised black, silver, gold
LED:	**mid power LED, high CRI** DIN EN 55015:2013, lifetime 50,000 hours | basis of lifetime L80B10
protection class:	IP 20, protection class III, CE, UL Listed No. E506729 - low voltage LED luminaire
power input:	24V DC (constant voltage)
allowed LED supply:	- power supply of PWM series by MeanWell with constant voltage 24V DC, class 2 - additional power supply is required for C1-mini-R-SL spotlight: LPF, LPV, NPF or APV by MeanWell with constant voltage 12V DC, class 2 (other power supplies on request)
dimming:	external
optional accessories:	anti-glare profile, aluminum anodised black, silver, gold or powder-coated according to RAL, light diffusion foil, LED spotlight C1-mini-R-SL

R-SL-16	optic (linear optic satined)	light colour (+/- 100 K)	LED	luminous flux (~3,000 K | ~50°)
7 W	~22°, ~35°, ~50°, ~55° beam angle	~3,000 K, ~4,000 K	240 LEDs/m (smallest separable unit 25 mm)	~400 lm/m at ~7 W/m (57 lm/W)
15 W	~22°, ~35°, ~50°, ~55° beam angle	~2,700 K, ~3,000 K, ~3,500 K, ~4,000 K, Tunable White ~2,700 K - 6,500 K	240 LEDs/m (smallest separable unit 25 mm)	~900 lm/m at ~15 W/m (60 lm/W)
20 W	~22°, ~35°, ~50°, ~55° beam angle	~3,000 K, ~4,000 K	240 LEDs/m (smallest separable unit 25 mm)	~1300 lm/m at ~20 W/m (65 lm/W)

dimensions

max. profile length 2000 mm,
from 2000 mm with connector,
individual cut from 100 mm to 2000 mm

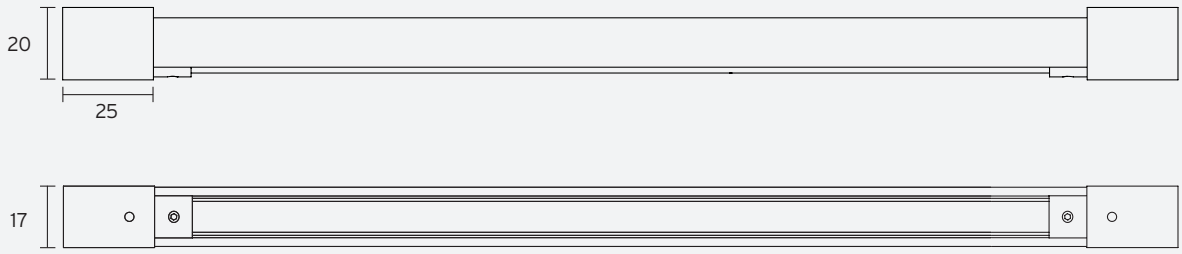

specification in mm

photometry

for light colour ~3,000 K | linear optics ~50° | colour rendering index typ. 97, R9 > 90, R12 > 90 | colour variation ≤ 3 SDCM

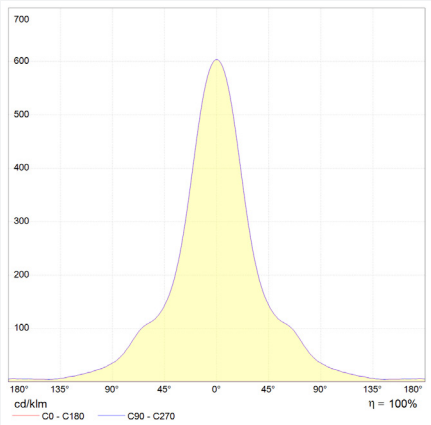

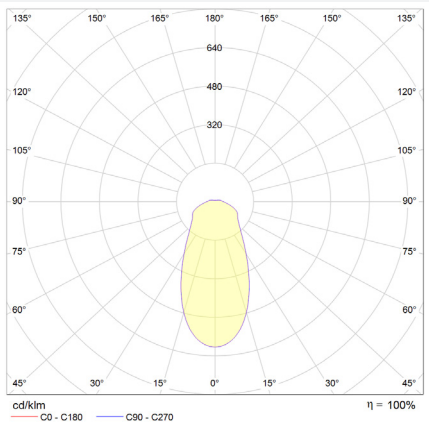

technical changes reserved | February 2023

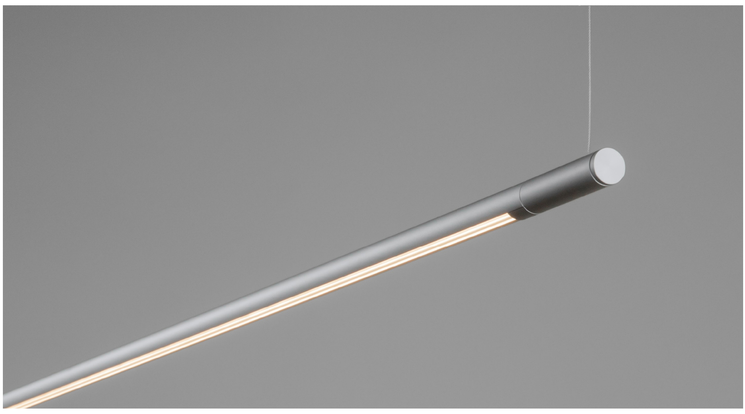

R-SL-16-PL // Technical Data

description:	LED pendant lamp, profile Ø 16 mm, 360° rotatable
housing colour:	aluminum anodised black, silver, gold
LED:	mid power LED, high CRI DIN EN 55015:2013, lifetime 50,000 hours | basis of lifetime L80B10
protection class:	IP 20, protection class III, CE, UL Listed No. E506729 - low voltage LED luminaire
power input:	24V DC (constant voltage)
allowed LED supply:	• power supply of PWM series by MeanWell with constant voltage 24V DC, class 2 • additional power supply is required for C1-mini-R-SL spotlight: LPF, LPV, NPF or APV by MeanWell with constant voltage 12V DC, class 2 (other power supplies on request)
dimming:	external
optional accessories:	anti-glare profile, aluminum anodised black, silver, gold or powder-coated according to RAL, light diffusion foil, LED spotlight C1-mini-R-SL

R-SL-16-PL	optic (linear optic satined)	light colour (+/- 100 K)	LED	luminous flux (~3,000 K | ~50°)
7 W	~22°, ~35°, ~50°, ~55° beam angle	• ~3,000 K • ~4,000 K	240 LEDs/m (smallest separable unit 25 mm)	~400 lm/m at ~7 W/m (57 lm/W)
15 W	~22°, ~35°, ~50°, ~55° beam angle	• ~2,700 K • ~3,000 K • ~3,500 K • ~4,000 K • Tunable White ~2,700 K - 6,500 K	240 LEDs/m (smallest separable unit 25 mm)	~900 lm/m at ~15 W/m (60 lm/W)
20 W	~22°, ~35°, ~50°, ~55° beam angle	• ~3,000 K • ~4,000 K	240 LEDs/m (smallest separable unit 25 mm)	~1300 lm/m at ~20 W/m (65 lm/W)

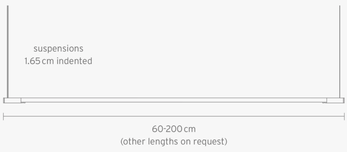

suspension

- steel cable suspension at 2 points
  (over 200 cm at 3 points)
- holder made of stainless steel
  incl. steel cable (200 cm)
- canopy on request

Data PDF | Enquiry IES | Enquiry LDT | Enquiry Price

LED light bar R-SL-16-T

A400114

description:	LED light bar for table, profile Ø 16 mm, 360° rotatable
housing colour:	aluminum anodised black, silver, gold
LED:	**mid power LED, high CRI** DIN EN 55015:2013, lifetime 50,000 hours | basis of lifetime L80B10
protection class:	IP 20, protection class III, CE, UL Listed No. E506729 - low voltage LED luminaire
power input:	24V DC (constant voltage)
allowed LED supply:	- power supply of PWM series by MeanWell with constant voltage 24V DC, class 2 - additional power supply is required for C1-mini-R-SL spotlight: LPF, LPV, NPF or APV by MeanWell with constant voltage 12V DC, class 2 (other power supplies on request)
dimming:	external
optional accessories:	anti-glare profile, aluminum anodised black, silver, gold or powder-coated according to RAL, light diffusion foil, LED spotlight C1-mini-R-SL

R-SL-16-T	optic (linear optic satined)	light colour (+/- 100 K)	LED	luminous flux (~3,000 K | ~50°)
7 W	~22°, ~35°, ~50°, ~55° beam angle	~3,000 K, ~4,000 K	240 LEDs/m (smallest separable unit 25 mm)	~400 lm/m at ~7 W/m (57 lm/W)
15 W	~22°, ~35°, ~50°, ~55° beam angle	~2,700 K, ~3,000 K, ~3,500 K, ~4,000 K, Tunable White ~2,700 K - 6,500 K	240 LEDs/m (smallest separable unit 25 mm)	~900 lm/m at ~15 W/m (60 lm/W)
20 W	~22°, ~35°, ~50°, ~55° beam angle	~3,000 K, ~4,000 K	240 LEDs/m (smallest separable unit 25 mm)	~1300 lm/m at ~20 W/m (65 lm/W)

dimensions

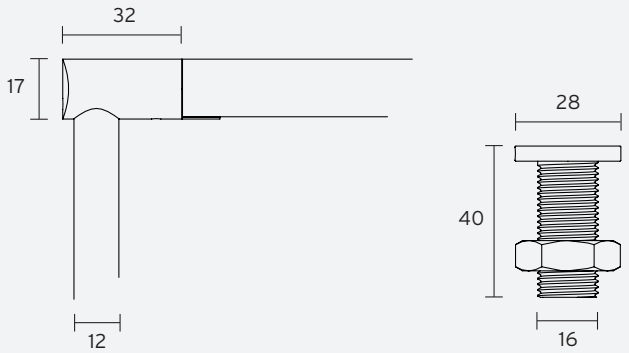

- max. profile length 2,000 mm, individual cut from 100 mm to 2,000 mm
- center support recommended from 1,200 mm length
- standard extension max. 440 mm (max. visible length 400 mm)
- can be shortened on request
- additional height adjustable via flange
- panel thickness 2 - 23 mm
- borehole Ø 16.5 mm

specification in mm

photometry

for light colour ~3,000 K | linear optics ~50° | colour rendering index typ. 97, R9 > 90, R12 > 90 | colour variation ≤ 3 SDCM

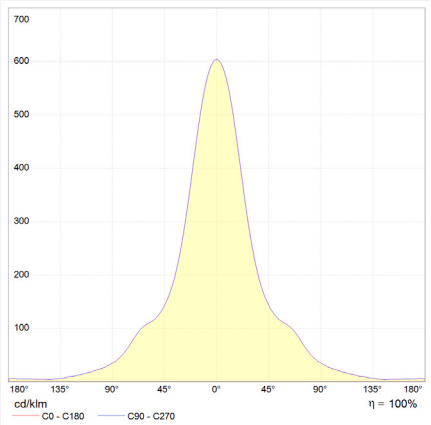

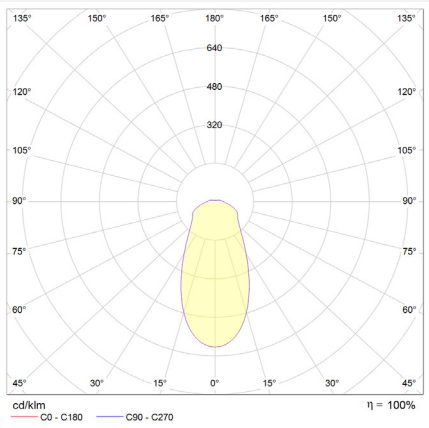

technical changes reserved | February 2023

LED light bar R-SL-16-TG

A400115

description:	LED light bar for table, profile Ø 16 mm, 360° rotatable
housing colour:	aluminum anodised black, silver, gold
LED:	**mid power LED, high CRI** DIN EN 55015:2013, lifetime 50,000 hours | basis of lifetime L80B10
protection class:	IP 20, protection class III, CE, UL Listed No. E506729 - low voltage LED luminaire
power input:	24V DC (constant voltage)
allowed LED supply:	- power supply of PWM series by MeanWell with constant voltage 24V DC, class 2 - additional power supply is required for C1-mini-R-SL spotlight: LPF, LPV, NPF or APV by MeanWell with constant voltage 12V DC, class 2 (other power supplies on request)
dimming:	external
optional accessories:	anti-glare profile, aluminum anodised black, silver, gold or powder-coated according to RAL, light diffusion foil, LED spotlight C1-mini-R-SL

R-SL-16-TG	optic (linear optic satined)	light colour (+/- 100 K)	LED	luminous flux (~3,000 K | ~50°)
7 W	~22°, ~35°, ~50°, ~55° beam angle	~3,000 K, ~4,000 K	240 LEDs/m (smallest separable unit 25 mm)	~400 lm/m at ~7 W/m (57 lm/W)
15 W	~22°, ~35°, ~50°, ~55° beam angle	~2,700 K, ~3,000 K, ~3,500 K, ~4,000 K, Tunable White ~2,700 K - 6,500 K	240 LEDs/m (smallest separable unit 25 mm)	~900 lm/m at ~15 W/m (60 lm/W)
20 W	~22°, ~35°, ~50°, ~55° beam angle	~3,000 K, ~4,000 K	240 LEDs/m (smallest separable unit 25 mm)	~1300 lm/m at ~20 W/m (65 lm/W)

dimensions

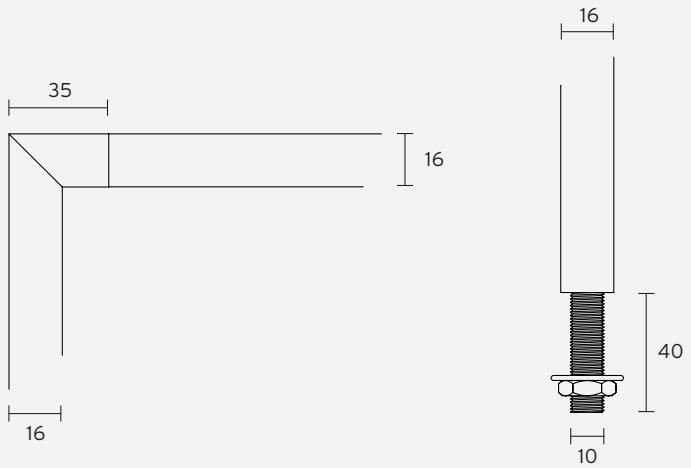

- max. profile length 2,000 mm, individual cut from 100 mm to 2,000 mm
- center support recommended from 1,200 mm length
- standard extension max. 440 mm (max. visible length 400 mm)
- can be shortened on request
- panel thickness 2 - 30 mm
- borehole Ø 10.5 mm

specification in mm

photometry

for light colour ~3,000 K | linear optics ~50° | colour rendering index typ. 97, R9 > 90, R12 > 90 | colour variation ≤ 3 SDCM

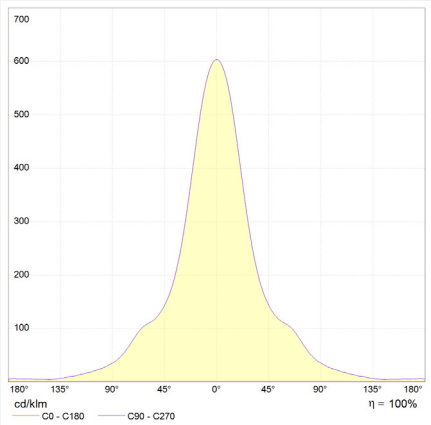

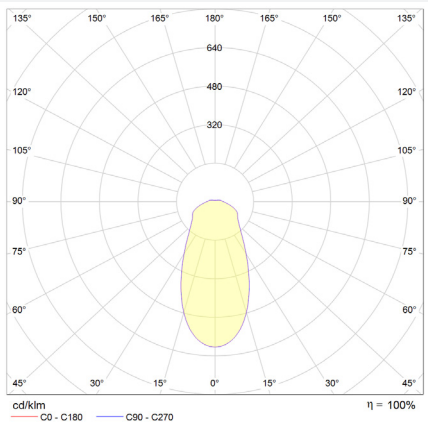

technical changes reserved | February 2023

LED light bar R-SL-16-V

A400113

description:	LED light bar, profile Ø 16 mm, 360° rotatable
housing colour:	aluminum anodised black, silver, gold
LED:	**mid power LED, high CRI** DIN EN 55015:2013, lifetime 50,000 hours | basis of lifetime L80B10
protection class:	IP 20, protection class III, CE, UL Listed No. E506729 - low voltage LED luminaire
power input:	24V DC (constant voltage)
allowed LED supply:	- power supply of PWM series by MeanWell with constant voltage 24V DC, class 2 - additional power supply is required for C1-mini-R-SL spotlight: LPF, LPV, NPF or APV by MeanWell with constant voltage 12V DC, class 2 (other power supplies on request)
dimming:	external
optional accessories:	anti-glare profile, aluminum anodised black, silver, gold or powder-coated according to RAL, light diffusion foil, cardboard cover strips, LED spotlight C1-mini-R-SL

R-SL-16-V	optic (linear optic satined)	light colour (+/- 100 K)	LED	luminous flux (~3,000 K | ~50°)
7 W	~22°, ~35°, ~50°, ~55° beam angle	~3,000 K, ~4,000 K	240 LEDs/m (smallest separable unit 25 mm)	~400 lm/m at ~7 W/m (57 lm/W)
15 W	~22°, ~35°, ~50°, ~55° beam angle	~2,700 K, ~3,000 K, ~3,500 K, ~4,000 K, Tunable White ~2,700 K - 6,500 K	240 LEDs/m (smallest separable unit 25 mm)	~900 lm/m at ~15 W/m (60 lm/W)
20 W	~22°, ~35°, ~50°, ~55° beam angle	~3,000 K, ~4,000 K	240 LEDs/m (smallest separable unit 25 mm)	~1300 lm/m at ~20 W/m (65 lm/W)

dimensions

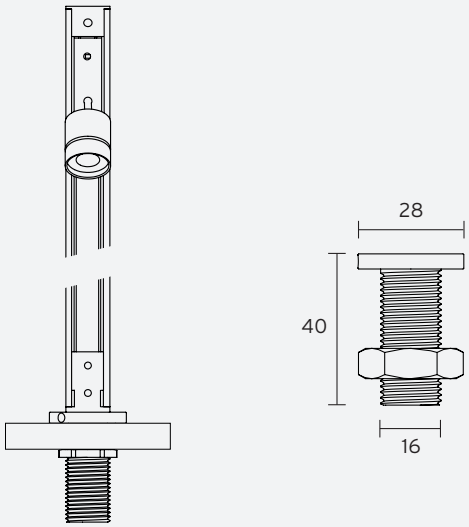

- max. profile length 2,000 mm, individual cut from 100 mm to 2,000 mm
- additional height adjustable via flange
- panel thickness 2 - 23 mm
- borehole Ø 16.5 mm

specification in mm

photometry

for light colour ~3,000 K | linear optics ~50° | colour rendering index typ. 97, R9 > 90, R12 > 90 | colour variation ≤ 3 SDCM

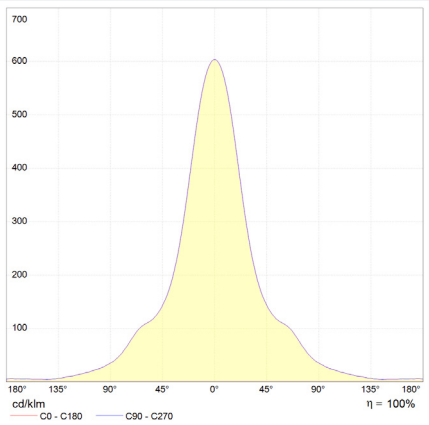

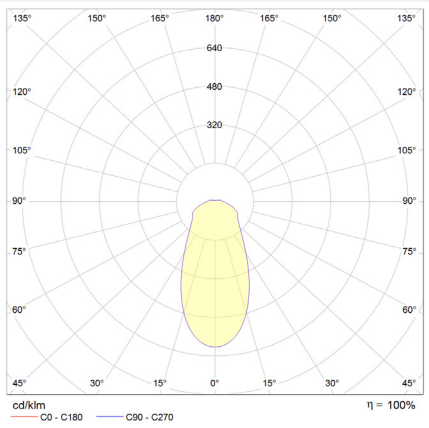

technical changes reserved | February 2023

UT-14 linear system

The miniature profile UT-14 with a width of only 16.8 mm and a height of 14 mm enables LED strips and magnetic tracks to be integrated in one profile at the same time. With this combination of linear light and track spotlight, the benefits of both - basic and accent lighting - can be applied in one system.
When the profile is suspended, the magnetic track is additionally stabilized and it can be used over longer distances. Another advantage is the positioning of the magnetic track on two levels. All track spotlights with a width of up to 13 mm can be positioned on the inner level and thus recede optically into the background.

In addition to the compact and aesthetic appearance, the design paid attention to a high degree of flexibility, function and expandability of the profile system.

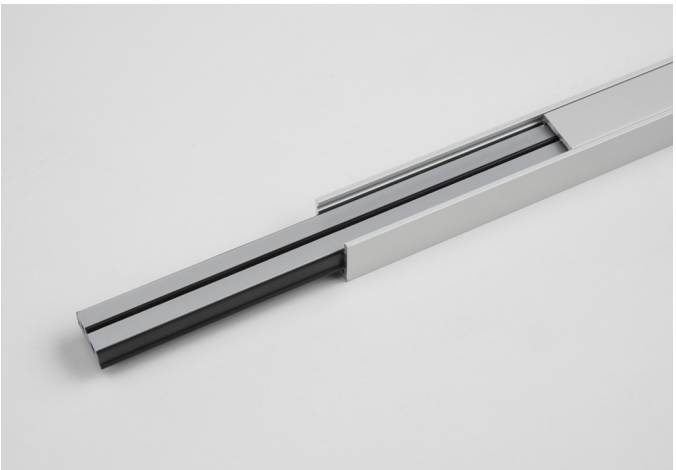

UT-14 system components

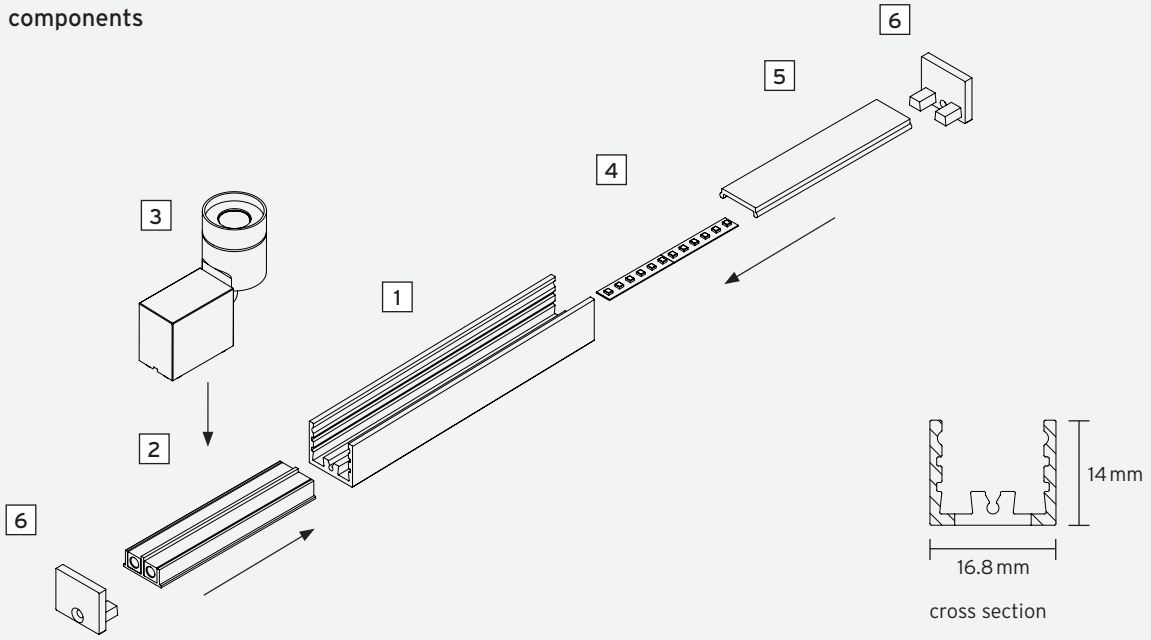

1 profile
- aluminum anodised matte in black, silver
- max. profile length 2,000 mm, extension with profile connectors possible

2 magnetic track
- low voltage magnetic track
- in silver matte, champagne matte, black matte, gold matte
- power input: 12V DC constant voltage

3 track spotlight
- C1-micro-LC, C1-mini-HC, C1-mini-HC-VL, C1-mini-HLC, C1-mini-LC, C1-mini-LC-VL, C1-mini-UHC, C1-STS, C1-USTS
- C1-mini-C, C2-C, C2-STS (top level only)

4 LED strip
- 240 LEDs/m (smallest separable unit 25 mm)
- light colour (+/- 100 K): ~2,700 K, ~3,000 K, ~4,000 K, Tunable White ~2,700 K - 6,500 K
- mid power LED, high CRI >97, DIN EN 55015:2013, lifetime 50,000 hours | basis of lifetime L80B10
- power input: 24V DC (constant voltage)

5 profile cover | linear lens
- aluminum anodised matte in black, silver
- flat satin linear lens with ~70° beam angle

6 end cap
- aluminum anodised matte in black, silver

suspension:
- standard length profile 2,000 mm (other lengths on request)
- steel cable suspension at 2 points
- holder made of stainless steel incl. steel cable and stabilizing tube (height 152 mm, Ø 10 mm)
- canopy on request

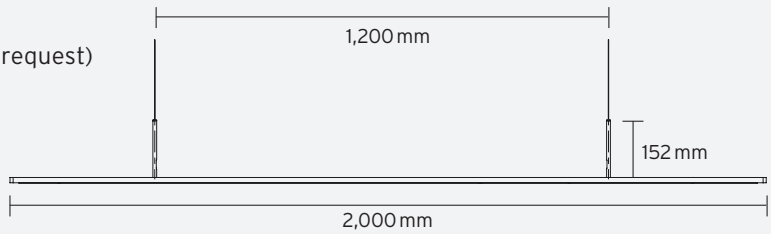

protection class: IP 20, protection class III, CE

allowed LED supply (other power supplies on request)**:**
- use with LED strips: power supply of PWM series by MeanWell with constant voltage 24V DC, class 2
- use with magnetic track: power supply for LPF, LPV, NPF, APV series by MeanWell with constant voltage 12V DC, class 2

technical changes reserved | August 2023